KP SQUARED ENGINEERING PTY LTD
Structural and Civil Engineers
Suite 4, Ground Level,
166-168 Grange Road,
Flinders Park SA 5025
ABN 91 884 532 708
ACN 168 153 188
www.kpsquared.com.au

FOOTING CONSTRUCTION REPORT - ISSUE A

REF: **161104**

DATE: **21st June 2018**

OWNER:

CLIENT: **Mr. Kenneth Wong**

SITE: **No. 541 Anzac Highway, Glenelg North**

BUILDING/STRUCTURE: **Proposed Double Storey Articulated "Hebel" Panel Residences (5 of)**

Please note: The calculations and details outlined within this report give specific recommendations for the abovementioned building/structure. Amendments to the construction or design must not be made without written approval from the Engineer. Report validity period is twenty four months (based on current Australian Standards and Regulations).

ATTACHMENTS: Civil Plans C-1-A, C-2-B, C-3-A, C-4-A, Footing Plans FP-1-A, FP-2-A, Structural Plans SD-1-A, SD-2-A, Standard Details (Sheets 1-12), Footing Calculations (FC1-FC9), Structural Calculations (SC1), Soil Borelogs & Borehole Location Plan, Details on the Use of the Footing Construction Report (4 pages), Footings/Slabs Specification (4 Pages), General Siteworks Notes (5 pages), Construction Notes (3 pages), CSIRO Homeowners Guide.

FOOTING TYPE: Reinforced concrete raft footings, founded 200mm into natural ground.

SITE INSPECTIONS: Inspections will incur additional fees:

1. After excavation of the footing beams prior to the placement of reinforcement.
2. After preparation of the reinforcement prior to the pouring of concrete.
3. As otherwise instructed by the engineer or requested by the client/contractor.

ADDITIONAL NOTES:

1. This is a Class 'E-D, P (FILL)' Site with a Ys value of approximately 77mm. Due to the effect of trees on the expected soil heave, additional corner reinforcement And lagging is required (refer to standard details) in accordance with a Class 'E-D, P' (FILL/TREES) site, with a Ys value of approximately 105mm.
2. Flexible connections for sewer and stormwater are required on this site.
3. The footing sizes specified have taken tree effects into account however, the owner Must be aware that a precise design for tree effects is outside current knowledge due To the complexity of tree root geometry, variable moisture extraction of the tree and The difficulty in predicting future tree growth. As such, some movement in the building Must be accepted. Trees must be kept well watered so that excessive dessication of The subsurface soils does not occur.
4. Footings are to be continuously trenched or piered 200mm into natural ground.

KP SQUARED ENGINEERING PTY LTD
Structural and Civil Engineers
Suite 4, Ground Level,
166-168 Grange Road,
Flinders Park SA 5025
ABN 91 884 532 708
ACN 168 153 188
www.kpsquared.com.au

5. Where trenched piers are used, they shall be 1000mm long by the width of footings, Trenched a minimum of 200mm into natural ground.
6. A trench inspection is mandatory for this site to ensure that footings are founded into Firm natural ground.
7. Pre wetting of the building area is mandatory for this site. Refer to site preparation Notes, within the general Site works specification.
8. Due to the reactive nature of the foundation soils adequate site drainage and site Paving will be necessary. The planting of large trees or shrubs adjacent to the Proposed dwelling should be avoided and landscaping should consist of lawns or Gardens where summer watering is maintained.

Kosta Paraskevopoulos

Per KP SQUARED ENGINEERING PTY LTD

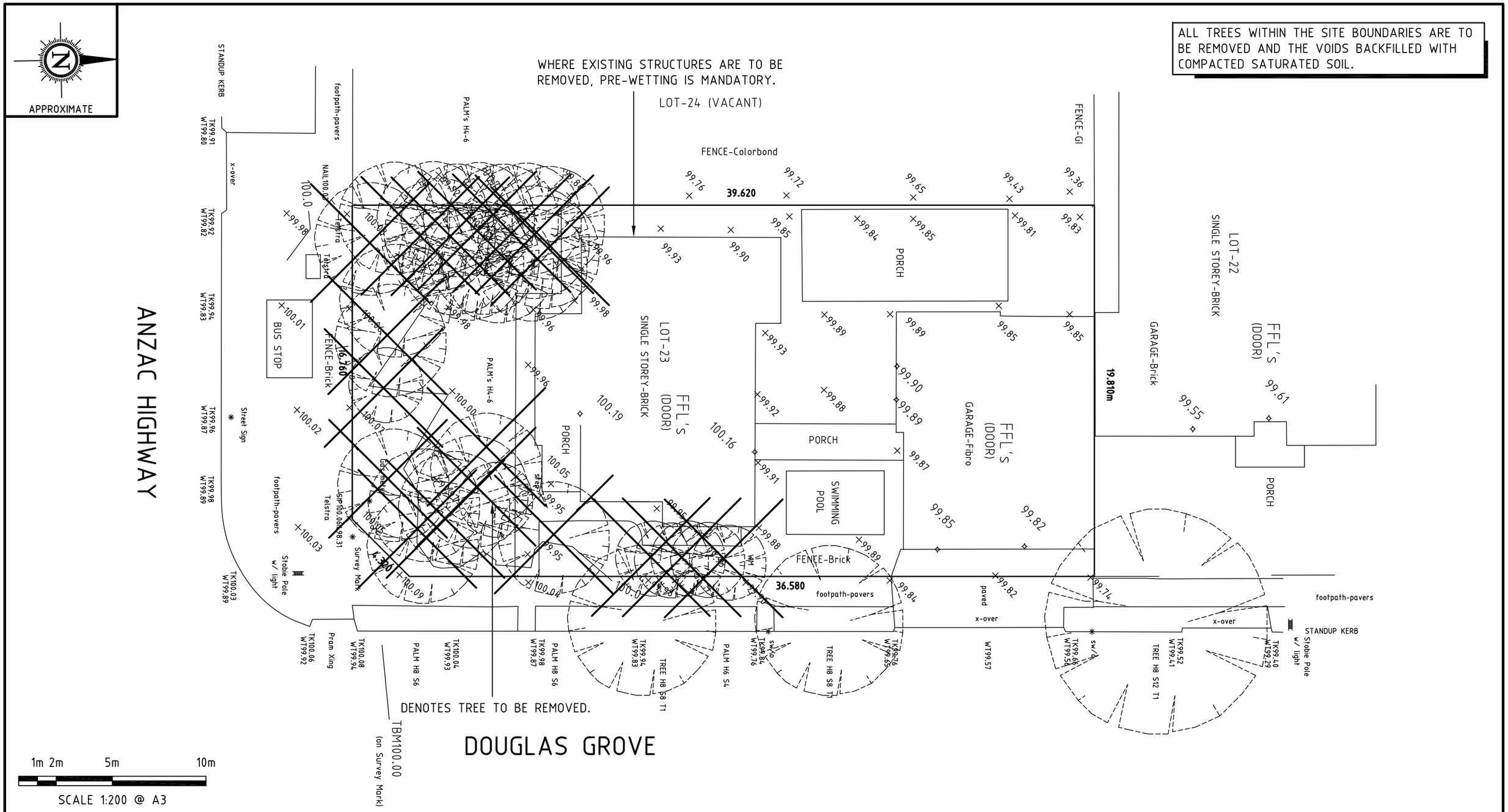

NOTES:

1. THIS IS AN ENGINEERING SURVEY ONLY AND SHALL NOT BE TAKEN AS A BOUNDARY IDENTIFICATION SURVEY. THE BOUNDARY DATA SHOWN IS TO BE TAKEN AS A GUIDE ONLY.
2. CONTACT 'DIAL BEFORE YOU DIG' PRIOR TO COMMENCEMENT OF WORKS TO VERIFY THE LOCATION AND DEPTH OF EXISTING SERVICES.
3. WHERE TREES ARE TO BE REMOVED, BACKFILL THE VOIDS WITH COMPACTED SATURATED SOIL.

LEGEND:

99.00 EXISTING SPOT LEVEL

EXISTING CONTOUR

ISSUE	DATE	AMENDMENT	APPROVED
A	17.03.17	FOR APPROVAL	BM

KPS QUARED ENGINEERING

SUITE 4, GROUND LEVEL
166-168 GRANGE ROAD,
FLINDERS PARK SA 5025
PH: 0413 991 106

PROJECT PROPOSED RESIDENCES

AT: 541 ANZAC HIGHWAY
GLENELG NORTH

FOR: K. WONG

DRAWING TITLE **LEVEL PLAN**

SCALE	DRAWN	ENGINEER	DATE
1:200	BM	BM	17.03.2017

SURVEYED	PROJECT No.	DRAWING No.	ISSUE	SHEET SIZE
BY OTHERS	161104	C1	A	A3

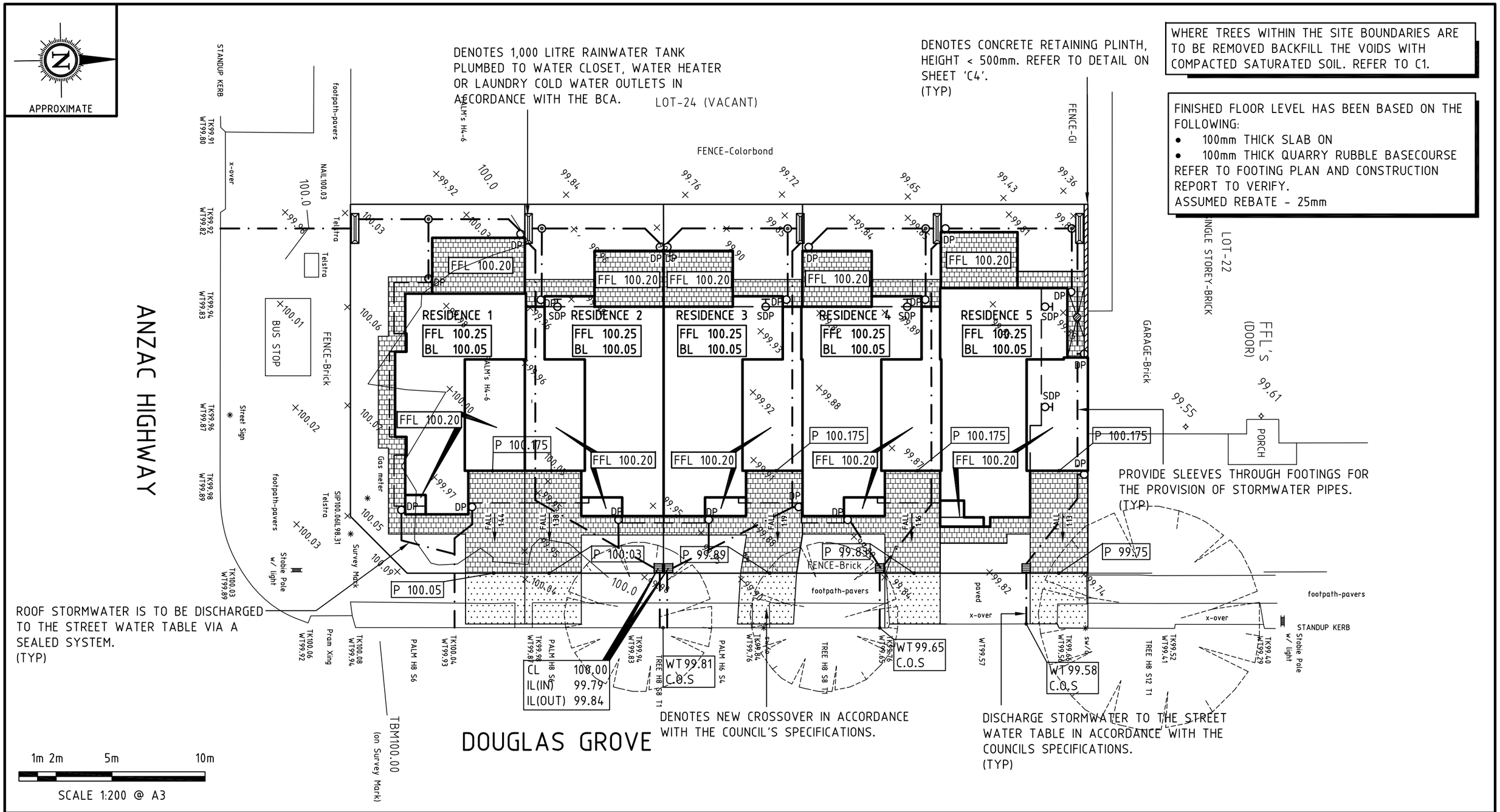

STORMWATER & DRAINAGE NOTES:

1. THIS IS AN ENGINEERING SURVEY ONLY AND SHALL NOT BE TAKEN AS A BOUNDARY IDENTIFICATION SURVEY. THE BOUNDARY DATA SHOWN IS TO BE TAKEN AS A GUIDE ONLY. REFER TO ARCHITECTURAL DRAWINGS FOR CORRECT DIMENSIONS AND SET-OUT POINTS.
2. CONTACT 'DIAL BEFORE YOU DIG' PRIOR TO COMMENCEMENT OF WORKS TO VERIFY THE LOCATION AND DEPTH OF EXISTING SERVICES.
3. WHERE TREES ARE TO BE REMOVED, BACKFILL THE VOIDS WITH COMPACTED SATURATED SOIL.
4. FLEXIBLE CONNECTIONS FOR SEWER AND STORMWATER PIPES ARE REQUIRED FOR SOIL CLASS 'H-D' & 'E-D' SITES (REFER TO THE GEOTECHNICAL/CONSTRUCTION REPORT TO VERIFY).
5. PATH LEVEL AT FLOOD GULLY TO BE A MINIMUM OF 165mm BELOW FINISHED FLOOR LEVEL.
6. PROVIDE 300mm COVER TO ALL STORMWATER PIPES SUBLECT TO VEHICULAR LOADING, ALL OTHER PIPES TO HAVE A MINIMUM COVER OF 150mm.

LEGEND:

- EXISTING SPOT LEVEL
- EXISTING CONTOUR
- STORMWATER PIPE Ø90 P.V.C (Ø100 IF SEALED). MIN. FALL 1:100 (U.N.O)
- Ø150 GRATED INLET - CL 100.22
- 300x300 GRATED SUMP
- DP DOWNPIPE
- SDP SPREADER DOWNPIPE
- INSPECTION OPENING
- PAVING (REFER TO SHEET 'C4')
- 90.00 DESIGN LEVEL
- P PAVING LEVEL
- CL COVER LEVEL
- IL INVERT LEVEL
- WT WATER TABLE LEVEL
- TK TOP OF KERB
- TRW TOP OF WALL
- BRW BOTTOM OF WALL

ISSUE	DATE	AMENDMENT	APPROVED
B	21.06.18	AMENDED FLOOR PLANS	KP
A	17.03.17	FOR APPROVAL	BM

KPS ENGINEERING

SUITE 4, GROUND LEVEL
166-168 GRANGE ROAD,
FLINDERS PARK SA 5025
PH: 0413 991 106

PROJECT PROPOSED RESIDENCES

AT: 541 ANZAC HIGHWAY
GLENELG NORTH

FOR: K. WONG

DRAWING TITLE **CIVIL & DRAINAGE PLAN**

SCALE	DRAWN	ENGINEER	DATE
1:200	BM	BM	21.06.2018

SURVEYED	PROJECT No.	DRAWING No.	ISSUE	SHEET SIZE
BY OTHERS	161104	C2	B	A3

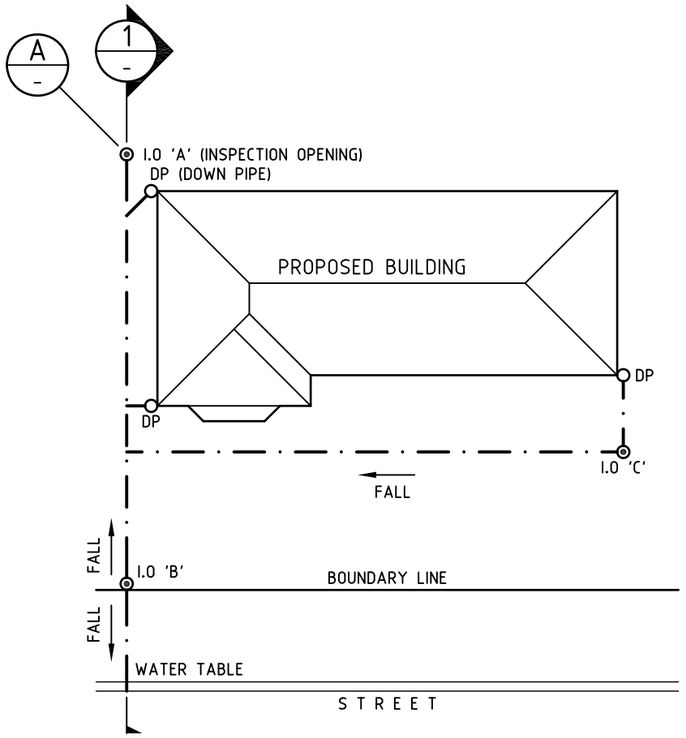

TYPICAL DOMESTIC SEALED (PRESSURISED) DRAINAGE SYSTEM LAYOUT

NOT TO SCALE

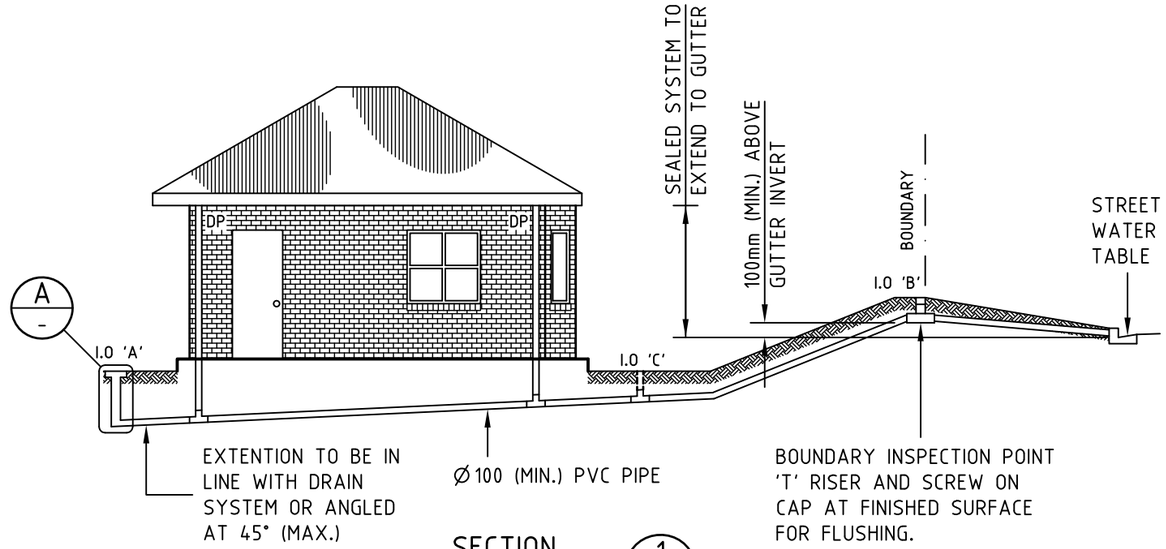

SECTION 1

NOT TO SCALE

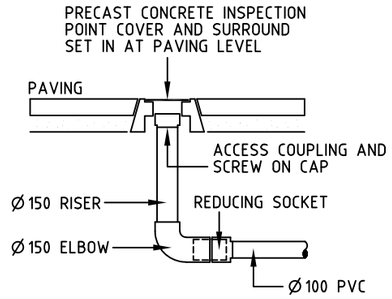

DETAIL A

NOT TO SCALE

GENERAL SEALED SYSTEM NOTES:

1. STORMWATER PIPES TO HAVE A MINIMUM FALL OF 1.0% (1 IN 100) UNLESS NOTED OTHERWISE.
2. DO NOT USE SEAMED SHEET METAL DOWN PIPES OR FITTINGS WITH A PRESSUREISED SYSTEM.
3. NO SURFACE INLETS (SUMPS OR GRATED INLET PITS) PERMITTED INTO SEALED SYSTEM.
4. PROVIDE LEAF GUARDS AT DOWN PIPE INLETS.
5. FLUSHING AND MAINTENANCE IS THE RESPONSIBILITY OF THE OWNER.

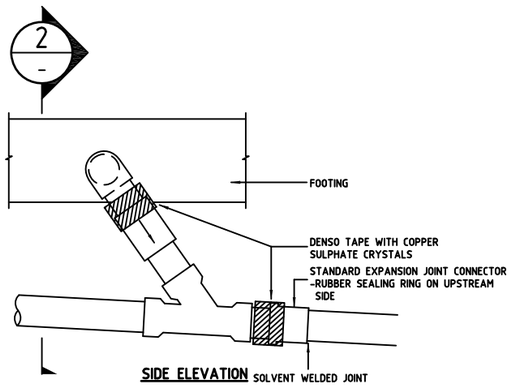

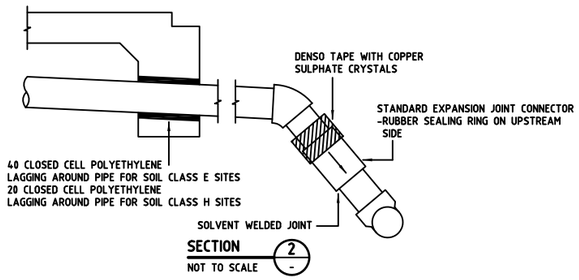

SECTION 2

NOT TO SCALE

STORMWATER & SEWER FLEXIBLE SERVICE CONNECTION DETAILS FOR CLASS 'H' & 'E' SITES

NOT TO SCALE

GENERAL FLEXIBLE CONNECTION NOTES:

DUE TO THE MOISTURE REACTIVE NATURE OF SOILS ON CLASS 'H' & 'E' SITES, IT IS REQUIRED THAT THE SERVICE PIPES INCLUDE STANDARD EXPANSION TYPE JOINT COUPLINGS. PROVIDE A FLEXIBLE CONNECTION TO PIPE IN ACCORDANCE WITH THE FOLLOWING;

1. CONNECTIONS ARE REQUIRED AT EACH LOCATION WHERE PIPES (50mm OR LARGER) PENETRATE OR PASS BENEATH THE EXTERNAL FOOTING BEAMS.
2. TWO EXPANSION JOINT CONNECTORS ARE REQUIRED, AS DETAILED ABOVE, AT EACH CONNECTION..
3. THE DENSO TAPE MUST BE SPRINKLED WITH COPPER SULPHATE CRYSTALS PRIOR TO WRAPPING AND MUST EXTEND 50mm BEYOND THE JOINT ON EITHER SIDE.
4. DETAILS ARE APPLICABLE TO TO SEWER AND STORMWATER PIPES.
5. REFER TO THE CONSTRUCTION/GEOTECHNICAL REPORT FOR SOIL CLASSIFICATION.

PROJECT	PROPOSED RESIDENCES AT: 541 ANZAC HIGHWAY GLENELG NORTH FOR: K. WONG			
DRAWING TITLE	STORMWATER DETAILS			
SCALE: AS SHOWN	DRAWN: BM	ENGINEER: BM		DATE: 17.03.2017
SURVEYED: BY OTHERS	PROJECT No.: 161104	DRAWING No.: C3	ISSUE: A	SHEET SIZE: A3

K P U SQUARED ENGINEERING
SUITE 4, GROUND LEVEL
166-168 GRANGE ROAD,
FLINDERS PARK SA 5025
PH: 0413 991 106

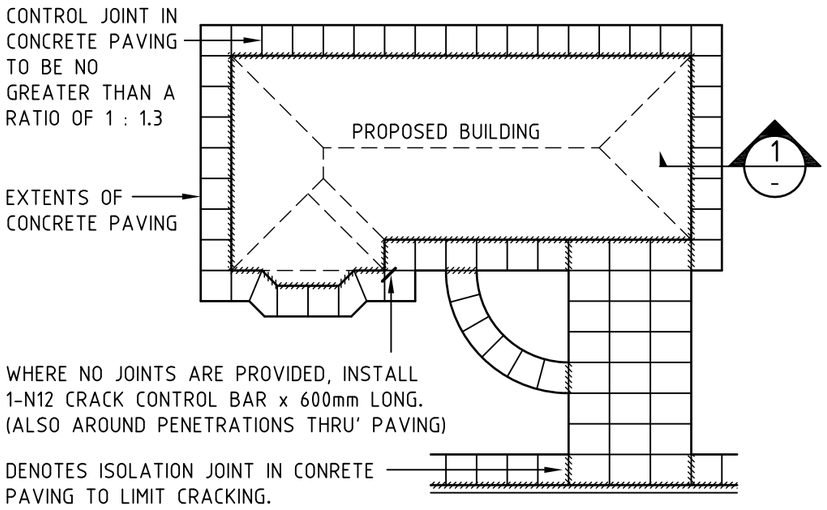

TYPICAL CONCRETE PAVING LAYOUT AROUND BUILDING

NOT TO SCALE

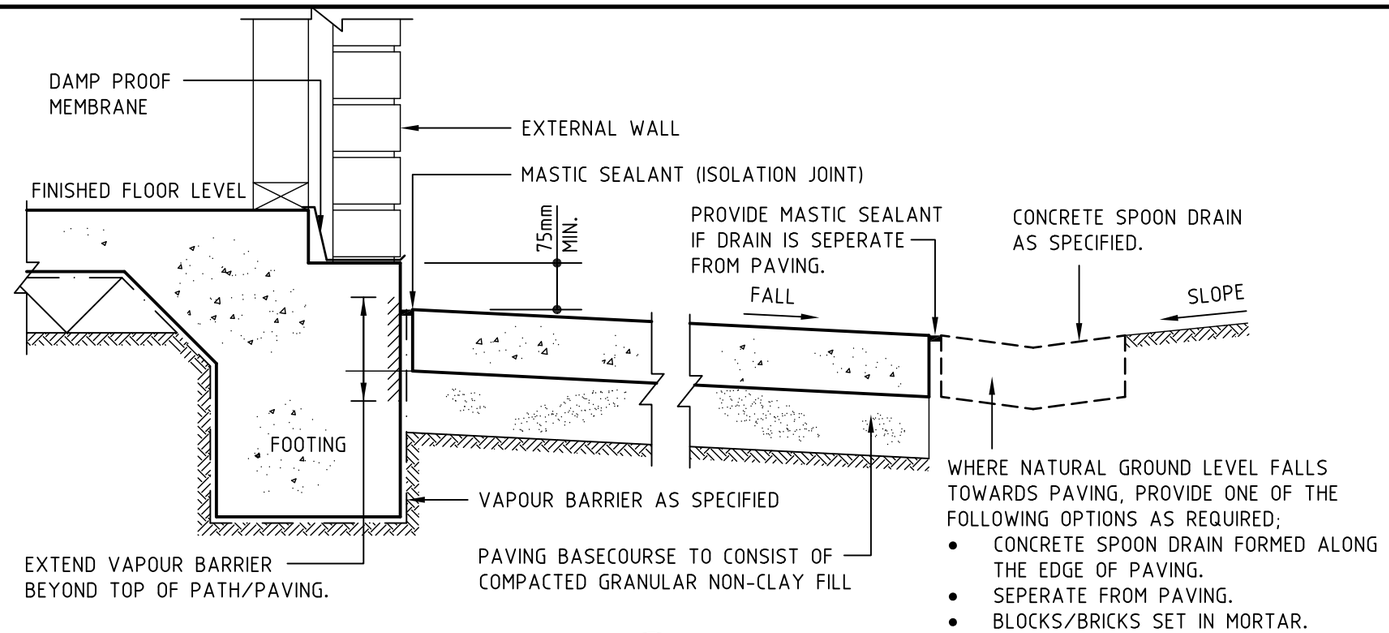

SECTION 1 -

NOT TO SCALE

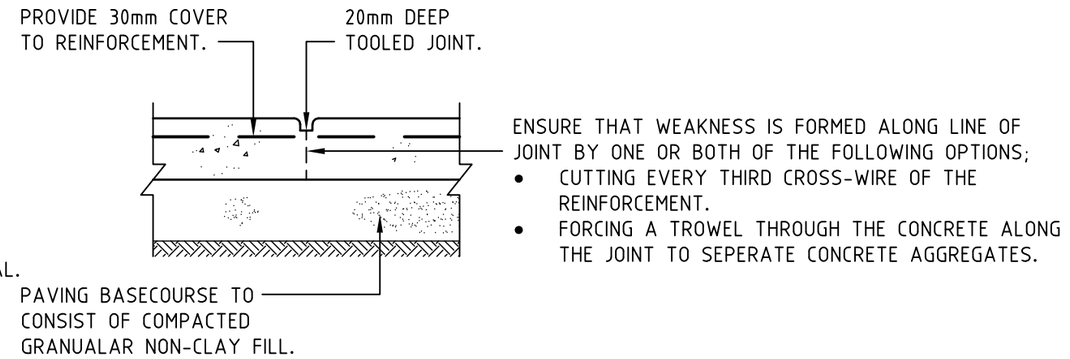

CONCRETE PAVING CONTROL JOINT DETAIL

NOT TO SCALE

GENERAL PAVING NOTES:

1. UNLESS NOTED OTHERWISE, PAVED AREAS SHALL HAVE A MINIMUM WIDTH OF 900mm. A PREFERABLE WIDTH OF 1200mm SHOULD BE ADOPTED FOR CLASS 'E-D' SITES.
2. WHERE CONCRETE PAVEMENTS ARE ADOPTED, REFER TO THE TABLE BELOW:
   CLASS 'A' OR 'S' SITES - MIN. CROSSFALL=1:30
   - FOOT TRAFFIC [2m] - 75mm THICK CONCRETE WITH SL52 FABRIC CENTRAL
   - LIGHT VEHICULAR TRAFFIC [3m] - 100mm THICK CONCRETE WITH SL62 FABRIC CENTRAL

   CLASS 'M' SITES - MIN. CROSSFALL=1:20
   - FOOT TRAFFIC [2m] - 75mm THICK CONCRETE WITH SL52 FABRIC CENTRAL
   - LIGHT VEHICULAR TRAFFIC [3m] - 100mm THICK CONCRETE WITH SL62 FABRIC CENTRAL

   CLASS 'H' SITES - MIN. CROSSFALL=1:20
   - FOOT TRAFFIC [2m] - 75mm THICK CONCRETE WITH SL62 FABRIC CENTRAL
   - LIGHT VEHICULAR TRAFFIC [4m] - 100mm THICK CONCRETE WITH SL72 FABRIC CENTRAL

   CLASS 'E' SITES - MIN. CROSSFALL=1:20
   - FOOT TRAFFIC [3m] - 100mm THICK CONCRETE WITH SL72 FABRIC CENTRAL
   - LIGHT VEHICULAR TRAFFIC [4m] - 120mm THICK CONCRETE WITH SL82 FABRIC CENTRAL

   CONCRETE PAVING AND GROUND LEVEL ADJACENT TO THE BUILDING PERIMETER SHALL BE GRADED 50mm OVER 1 METRE (1:20) AWAY FROM THE BUILDING.
   MINIMUM CROSSFALLS MAY ALSO BE DESIGNED IN ACCORDANCE WITH THE MAXIMUM ALLOWABLE FALLS DENOTED IN 'AS 1428 DESIGN FOR ACCESS & MOBILITY'.
   [Xm] DENOTES THE MAXIMUM DISTANCE BETWEEN CONTROL JOINTS (NOTING THAT LENGTH OF ADJACENT SIDES SHOULD BE IN THE RATIO OF 1 TO 1.3 MAX).
3. BRICK, BLOCK & BITUMEN PAVEMENTS SHALL ADHERE TO CROSSFALLS AS NOTED BELOW FOR CLASS 'A, S, M, H & E' SITES. CONSTRUCTION SHALL BE IN ACCORDANCE WITH THE MANUFACTURERS SPECIFICATIONS.
4. WHERE PAVING CONSTRUCTION IS UNDERTAKEN ON CLASS 'H' OR 'E' SITES, IT IS PREFERABLE TO COMMENCE PAVING WORK AT THE END OF WINTER WHEN SITE SOIL IT STILL WET TO HELP LIMIT A REDUCTION IN CROSSFALLS.
   SHOULD TO BUILDING BE OCCUPIED DURING THE WINTER MONTHS WITH NO PAVING PROVIDED, ENSURE THAT THE SOIL SURFACE TO THE PERIMETER OF THE BUILDING IS MAINTAINED TO A WELL DRAINED STATE UNTIL SUCH TIME THAT PAVING IS INSTALLED.
   SHOULD IT BE NECESSARY TO CONSTRUCT PAVING ON THESE TYPES OF SOILS DURING OTHER TIMES OF THE YEAR, I.E THE END OF SUMMER, THE CROSSFALLS SHALL BE TWICE OF THAT INDICATED IN NOTE "2".
5. SHOULD TO DWELLING BE OCCUPIED DURING THE WINTER MONTHS WITH NO PAVING PROVIDED, ENSURE THAT THE SOIL SURFACE TO THE PERIMETER OF THE BUILDING IS MAINTAINED TO A WELL DRAINED STATE UNTIL SUCH TIME THAT PAVING IS INSTALLED.
6. ALL PAVEMENTS MUST BE SET DOWN 75mm BELOW THE REBATE.
7. PAVING SHALL BE PREPARED ON A FIRM CLEAN BASE WHERE ALL BUILDING DEBRIS IS REMOVED FROM THE PERIMETER OF THE BUILDING. A COMPACTED QUARRY RUBBLE BASE IS TO BE PROVIDED AS REQUIRED TO ELEVATE PAVING AND ACHIEVE NECESSARY CROSSFALLS.
8. PAVEMENTS SHALL NOT BREACH THE DAMP PROOF COURSE OR BUILT-IN DAMP PROOF MEMBRANE UNLESS OTHER ADEQUATE DAMP-PROOFING MEASURES HAVE BEEN TAKEN.
9. REACTIVE SOILS MAY CAUSE PAVING TO SEPERATE HORIZONTALLY FROM THE BUILDING PERIMETER. IT IS IMPORTANT THAT ANY GAPS BETWEEN THE BUILDING AND PAVING BE IMMEDIATLEY SEALED WITH A FLEXIBLE MASTIC SEALANT.
10. PROVIDE EGDE DRAINS WHERE NECESSARY TO DIVERT RUNOOF CLEAR OF THE BUILDING.
11. PROVIDE TERMITE PROTECTION TO AS 3660.1.

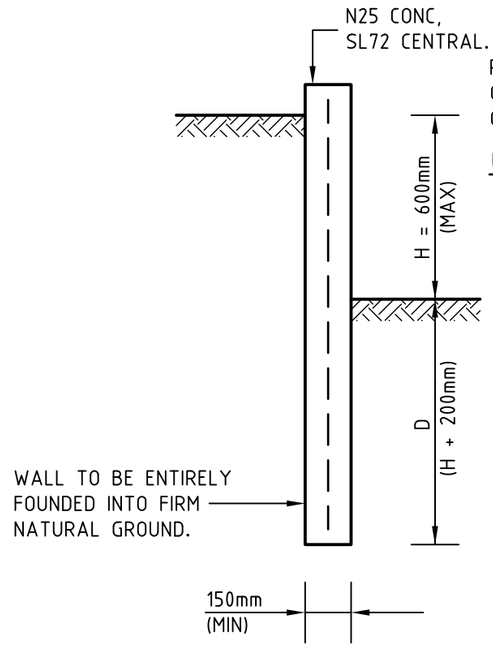

RETAINING PLINTH DETAIL

N.T.S

PROJECT	PROPOSED RESIDENCES
	AT: 541 ANZAC HIGHWAY GLENELG NORTH
	FOR: K. WONG
DRAWING TITLE	EARTHWORKS & PAVING DETAILS

SCALE	DRAWN	ENGINEER	DATE
AS SHOWN	BM	BM	17.03.2017

SURVEYED	PROJECT No.	DRAWING No.	ISSUE	SHEET SIZE
BY OTHERS	161104	C4	A	A3

KPUD SQUARED ENGINEERING

SUITE 4, GROUND LEVEL
166-168 GRANGE ROAD,
FLINDERS PARK SA 5025
PH: 0413 991 106

DWELLINGS 1, 2 & 3

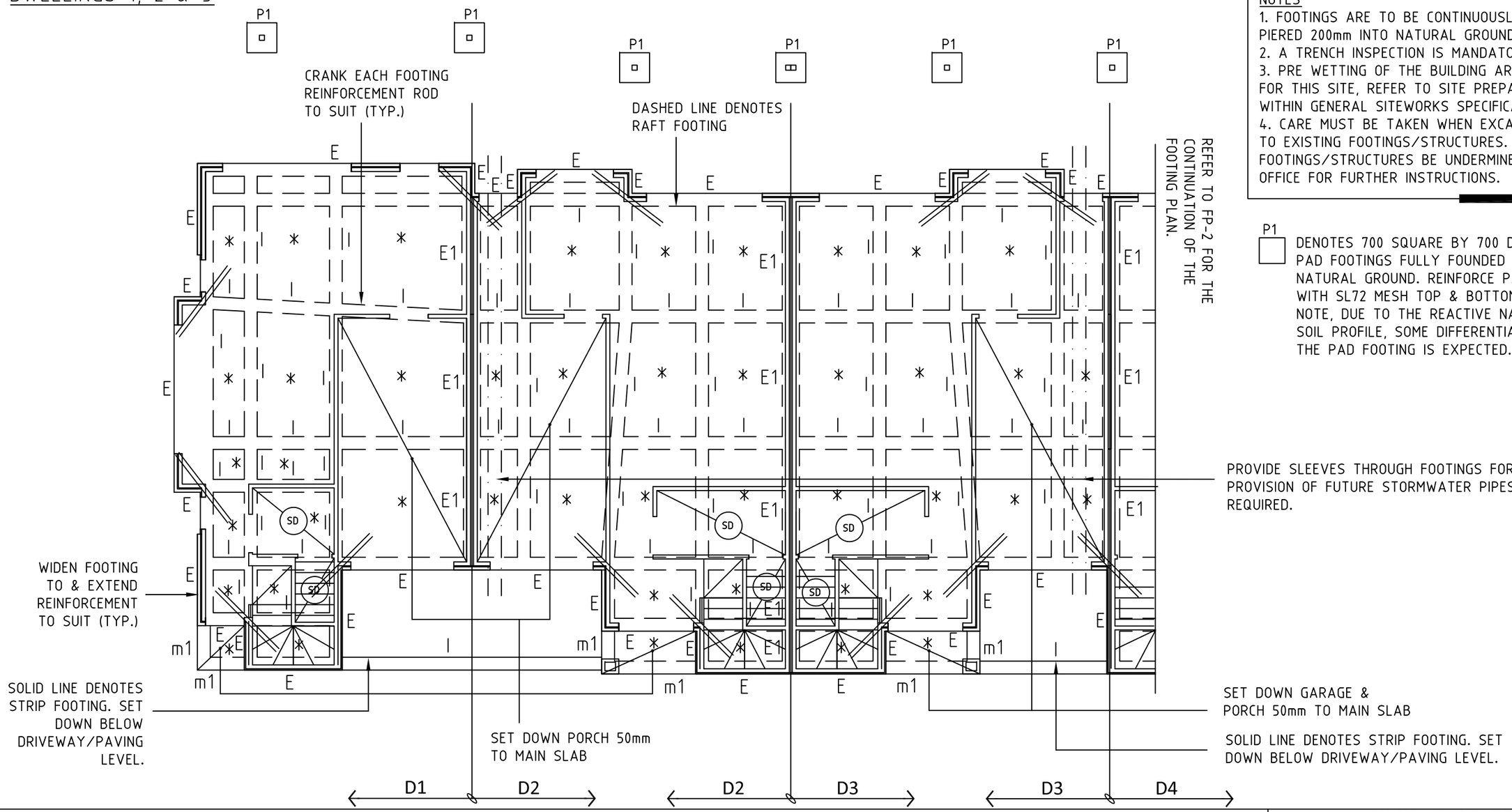

NOTES
1. FOOTINGS ARE TO BE CONTINUOUSLY TRENCHED OR PIERED 200mm INTO NATURAL GROUND.
2. A TRENCH INSPECTION IS MANDATORY FOR THIS SITE.
3. PRE WETTING OF THE BUILDING AREA IS MANDATORY FOR THIS SITE, REFER TO SITE PREPARATION NOTES WITHIN GENERAL SITEWORKS SPECIFICATION.
4. CARE MUST BE TAKEN WHEN EXCAVATING ADJACENT TO EXISTING FOOTINGS/STRUCTURES. SHOULD EXISTING FOOTINGS/STRUCTURES BE UNDERMINED, CONTACT THIS OFFICE FOR FURTHER INSTRUCTIONS.

P1 DENOTES 700 SQUARE BY 700 DEEP CONCRETE PAD FOOTINGS FULLY FOUNDED INTO FIRM NATURAL GROUND. REINFORCE PAD FOOTINGS WITH SL72 MESH TOP & BOTTOM (TYP). PLEASE NOTE, DUE TO THE REACTIVE NATURE OF THE SOIL PROFILE, SOME DIFFERENTIAL MOVEMENT OF THE PAD FOOTING IS EXPECTED.

FOOTING NOTES

1. THIS DRAWING MUST BE READ IN CONJUNCTION WITH THE ARCHITECTURAL DRAWINGS AND DETAILS CONTAINED WITHIN THIS REPORT.
2. MINIMUM CHARACTERISTIC CONCRETE STRENGTH TO BE f'c = 20Mpa.
3. SLAB ON GROUND TO BE 100mm THICK & REINFORCED WITH SL82 TOP UNLESS NOTED OTHERWISE.
4. SLAB THICKNESS & FOOTING DEPTH MUST BE MAINTAINED AT ALL SETDOWNS (PROVIDE STEPS AS PER STANDARD DETAILS).
5. LAPS IN MESH TO BE ONE FULL SQUARE PLUS 25MM.
6. WHERE BRITTLE FLOOR COVERINGS ARE TO BE USED, PROVIDE SL92T & SL72B.
7. DENOTES TRENCHED PIER, 1000 LONG BY THE WIDTH OF THE FOOTING, FOUNDED A MINIMUM OF 200MM INTO NATURAL GROUND.
8. THE SPACING OF LIGATURES MUST BE REDUCED TO 300c/c BETWEEN TRENCHED PIERS.
9. DENOTES 125 THICK SLAB REINFORCED WITH SL82 TOP & SL72 BOTTOM.
10. THIS IS A CLASS 'M-D,P(FILL,TREES)' SITE - LAGGING & FLEXIBLE CONNECTIONS REQUIRED AS PER THE SITE CLASSIFICATION - REFER TO STANDARD DETAILS.
11. DENOTES ARTICULATION JOINT IN THE HEBEL/MASONRY TO FULL HEIGHT. REFER TO DRAWING SD-1 AND SD-2 FOR DETAILS.
12. DENOTES 4N12 DOWELS (2T,2B) 600 LONG OVERALL, DRILL & EPOXY GROUT 200 INTO EXISTING FOOTING.
13. FLEXIBLE SEWER & STORMWATER CONNECTIONS ARE REQUIRED FOR THIS SITE.
14. THE OWNER'S ATTENTION IS DRAWN TO THE CSIRO'S INFORMATION SHEET 'GUIDE TO HOMEOWNERS ON FOUNDATION MAINTENANCE & FOOTING PERFORMANCE' (COPY IS ATTACHED).
15. INDICATES WET AREAS SET DOWN - GENERALLY 25MM, 50MM IN SHOWER AREA.
16. DENOTES CRACK CONTROL BARS: 3N12 2M LONG OR 2N16.
17. REFER TO ARCHITECTURALS DRAWINGS FOR ALL SETTING OUT AND DIMENSIONS.
18. DENOTES SET DOWN IN ACCORDANCE WITH ARCHITECTURAL DETAILS.

FOOTING SCHEDULE

FOOTING	WIDTH, W	DEPTH, D	REINFORCEMENT	LIGATURES
E	300	900	3N16T&3N16B	W8 @1000c/c
I	300	900	3N16T&3N16B	W8 @1000c/c
m1	300	600	3N16T&3N16B	W7 @1000c/c
E1	400	900	4N16T&4N16B	W8 @1000c/c
-	-	-	-	-
-	-	-	-	-
-	-	-	-	-
-	-	-	-	-
-	-	-	-	-

ISSUE	DATE	AMENDMENT	APPROVED
A	21/06/18	FOR APPROVAL/CONSTRUCTION	KP

KPU SQUARED ENGINEERING
SUITE 4, GROUND LEVEL
166-168 GRANGE ROAD,
FLINDERS PARK SA 5025
PH: 0413 991 106

PROJECT PROPOSED RESIDENCES
AT: 541 ANZAC HIGHWAY GLENELG EAST
FOR: WP PROPERTY GROUP

DRAWING TITLE FOOTING PLAN

SCALE	DRAWN	ENGINEER	DATE
1:100	MH	MH	21/06/2018

CHECKED	PROJECT No.	DRAWING No.	ISSUE	SHEET SIZE
KP	161104	FP-1	A	A3

DWELLINGS 4 & 5

TP -DENOTES TRENCHED PIER 1000 LONG BY WIDTH OF FOOTING WIDE, 1400 DEEP OVERALL FULLY FOUNDED INTO FIRM NATURAL, TO LIMIT POSSIBLE OVERTURNING OF THE FENCE.

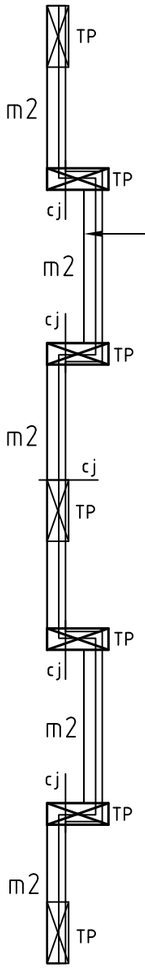

FENCE FOOTING LAYOUT

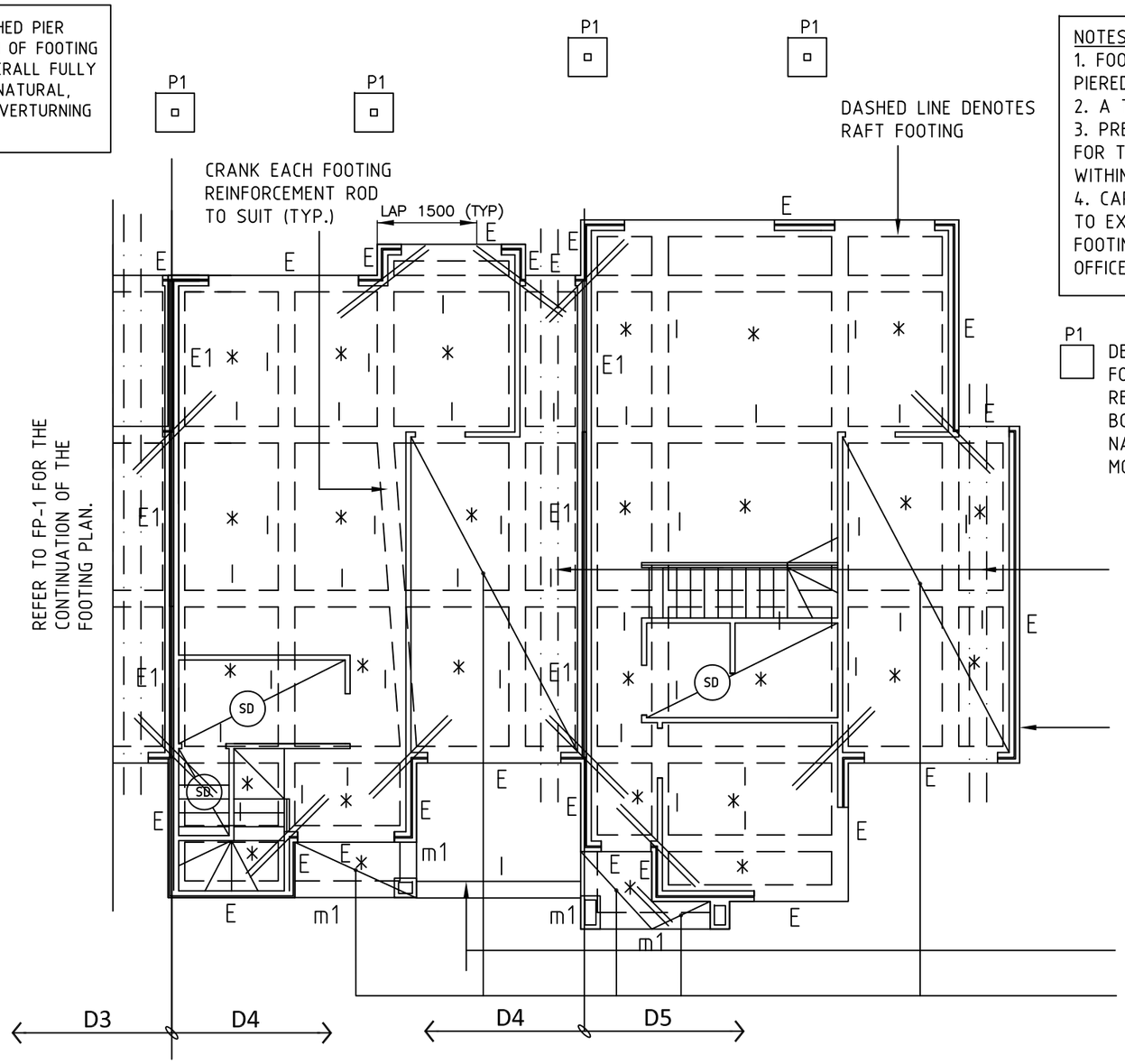

NOTES
1. FOOTINGS ARE TO BE CONTINUOUSLY TRENCHED OR PIERED 200mm INTO NATURAL GROUND.
2. A TRENCH INSPECTION IS MANDATORY FOR THIS SITE.
3. PRE WETTING OF THE BUILDING AREA IS MANDATORY FOR THIS SITE, REFER TO SITE PREPARATION NOTES WITHIN GENERAL SITEWORKS SPECIFICATION.
4. CARE MUST BE TAKEN WHEN EXCAVATING ADJACENT TO EXISTING FOOTINGS/STRUCTURES. SHOULD EXISTING FOOTINGS/STRUCTURES BE UNDERMINED, CONTACT THIS OFFICE FOR FURTHER INSTRUCTIONS.

P1 DENOTES 700 SQUARE BY 700 DEEP CONCRETE PAD FOOTINGS FULLY FOUNDED INTO FIRM NATURAL GROUND. REINFORCE PAD FOOTINGS WITH SL72 MESH TOP & BOTTOM (TYP). PLEASE NOTE, DUE TO THE REACTIVE NATURE OF THE SOIL PROFILE, SOME DIFFERENTIAL MOVEMENT OF THE PAD FOOTING IS EXPECTED.

PROVIDE SLEEVES THROUGH FOOTINGS FOR THE PROVISION OF FUTURE STORMWATER PIPES AS REQUIRED.

NOTE: FOOTINGS ON BOUNDARY ARE TO BE TRENCHED CONTINUOUSLY 600 BELOW EXISTING ADJOINING GROUND LEVEL OR 200 INTO NATURAL GROUND, WHICHEVER IS GREATER. PROVIDE SL92 VERTICAL TO EXPOSED EDGE OF FOOTING.

SOLID LINE DENOTES STRIP FOOTING. SET DOWN BELOW DRIVEWAY/PAVING LEVEL.

SET DOWN GARAGE & PORCH 50mm TO MAIN SLAB

FOOTING NOTES

1. THIS DRAWING MUST BE READ IN CONJUNCTION WITH THE ARCHITECTURAL DRAWINGS AND DETAILS CONTAINED WITHIN THIS REPORT.
2. MINIMUM CHARACTERISTIC CONCRETE STRENGTH TO BE f'c = 20Mpa.
3. SLAB ON GROUND TO BE 100mm THICK & REINFORCED WITH SL82 TOP UNLESS NOTED OTHERWISE.
4. SLAB THICKNESS & FOOTING DEPTH MUST BE MAINTAINED AT ALL SETDOWNS (PROVIDE STEPS AS PER STANDARD DETAILS).
5. LAPS IN MESH TO BE ONE FULL SQUARE PLUS 25MM.
6. WHERE BRITTLE FLOOR COVERINGS ARE TO BE USED, PROVIDE SL92T & SL72B.
7. DENOTES TRENCHED PIER, 1000 LONG BY THE WIDTH OF THE FOOTING, FOUNDED A MINIMUM OF 200MM INTO NATURAL GROUND.
8. THE SPACING OF LIGATURES MUST BE REDUCED TO 300c/c BETWEEN TRENCHED PIERS.
9. DENOTES 125 THICK SLAB REINFORCED WITH SL82 TOP & SL72 BOTTOM.
10. THIS IS A CLASS 'M-D,P(FILL,TREES)' SITE - LAGGING & FLEXIBLE CONNECTIONS REQUIRED AS PER THE SITE CLASSIFICATION - REFER TO STANDARD DETAILS.
11. DENOTES ARTICULATION JOINT IN THE HEBEL/MASONRY TO FULL HEIGHT. REFER TO DRAWING SD-1 AND SD-2 FOR DETAILS.
12. DENOTES 4N12 DOWELS (2T,2B) 600 LONG OVERALL, DRILL & EPOXY GROUT 200 INTO EXISTING FOOTING.
13. FLEXIBLE SEWER & STORMWATER CONNECTIONS ARE REQUIRED FOR THIS SITE.
14. THE OWNER'S ATTENTION IS DRAWN TO THE CSIRO'S INFORMATION SHEET 'GUIDE TO HOMEOWNERS ON FOUNDATION MAINTENANCE & FOOTING PERFORMANCE' (COPY IS ATTACHED).
15. INDICATES WET AREAS SET DOWN - GENERALLY 25MM, 50MM IN SHOWER AREA.
16. DENOTES CRACK CONTROL BARS: 3N12 2M LONG OR 2N16.
17. REFER TO ARCHITECTURALS DRAWINGS FOR ALL SETTING OUT AND DIMENSIONS.
18. DENOTES SET DOWN IN ACCORDANCE WITH ARCHITECTURAL DETAILS.

FOOTING SCHEDULE

FOOTING	WIDTH, W	DEPTH, D	REINFORCEMENT	LIGATURES
E	300	900	3N16T&3N16B	W8 @1000c/c
I	300	900	3N16T&3N16B	W8 @1000c/c
m1	300	600	3N16T&3N16B	W7 @1000c/c
E1	400	900	4N16T&4N16B	W8 @1000c/c
m2	300	550	4N12T&4N12B	W7 @300c/c
-	-	-	-	-
-	-	-	-	-
-	-	-	-	-
-	-	-	-	-

ISSUE	DATE	AMENDMENT	APPROVED
A	21/06/18	FOR APPROVAL/CONSTRUCTION	KP

KPU SQUARED ENGINEERING
SUITE 4, GROUND LEVEL
166-168 GRANGE ROAD,
FLINDERS PARK SA 5025
PH: 0413 991 106

PROJECT PROPOSED RESIDENCES
AT: 541 ANZAC HIGHWAY GLENELG WEST
FOR: WP PROPERTY GROUP

DRAWING TITLE FOOTING PLAN

SCALE	DRAWN	ENGINEER	DATE
1:100	MH	MH	21/06/2018

CHECKED	PROJECT No.	DRAWING No.	ISSUE	SHEET SIZE
KP	161104	FP-2	A	A3

cj DENOTES ARTICULATION JOINT IN THE MASONRY/HEBEL PANEL TO FULL HEIGHT. REFER TO STANDARD DETAILS SHEET 6 OF 12 FOR SPECIFICATIONS. ARTICULATION JOINTS WITHIN THE HEBEL PANEL ARE TO BE INSTALLED IN ACCORDANCE WITH THE MANUFACTURERS SPECIFICATIONS. ARTICULATION JOINTS IN WITHIN THE PARTY/BOUNDARY WALLS ARE TO BE FILLED WITH A FIRE RESISTANCE MATERIAL TO ENSURE A FIRE RESISTANCE LEVEL OF 60 / 60 / 60 IS ACHIEVED.

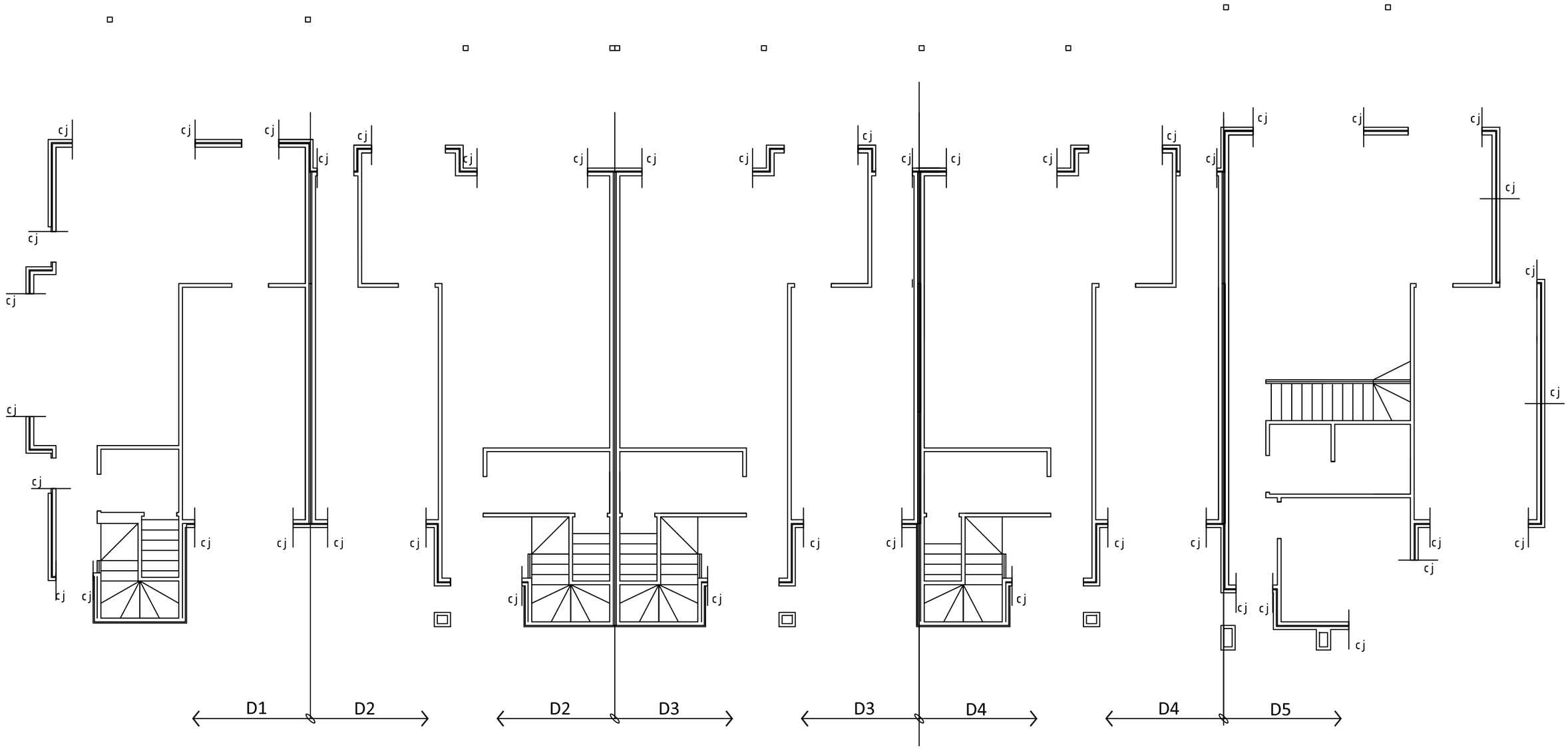

GROUND FLOOR ARTICULATION JOINT LAYOUT.

ISSUE	DATE	AMENDMENT	APPROVED
A	21/06/18	FOR APPROVAL/CONSTRUCTION	KP

KPU SQUARED ENGINEERING

SUITE 4, GROUND LEVEL
166-168 GRANGE ROAD,
FLINDERS PARK SA 5025
PH: 0413 991 106

PROJECT PROPOSED RESIDENCES

AT: 541 ANZAC HIGHWAY
GLENELG EAST

FOR: WP PROPERTY GROUP

DRAWING TITLE STRUCTURAL PLAN

SCALE	DRAWN	ENGINEER	DATE
1:100	MH	MH	21/06/2018

CHECKED	PROJECT No.	DRAWING No.	ISSUE	SHEET SIZE
KP	161104	SD-1	A	A3

cj DENOTES ARTICULATION JOINT IN THE MASONRY/HEBEL PANEL TO FULL HEIGHT. REFER TO STANDARD DETAILS SHEET 6 OF 12 FOR SPECIFICATIONS. ARTICULATION JOINTS WITHIN THE HEBEL PANEL ARE TO BE INSTALLED IN ACCORDANCE WITH THE MANUFACTURERS SPECIFICATIONS. ARTICULATION JOINTS IN WITHIN THE PARTY/BOUNDARY WALLS ARE TO BE FILLED WITH A FIRE RESISTANCE MATERIAL TO ENSURE A FIRE RESISTANCE LEVEL OF 60 / 60 / 60 IS ACHIEVED.

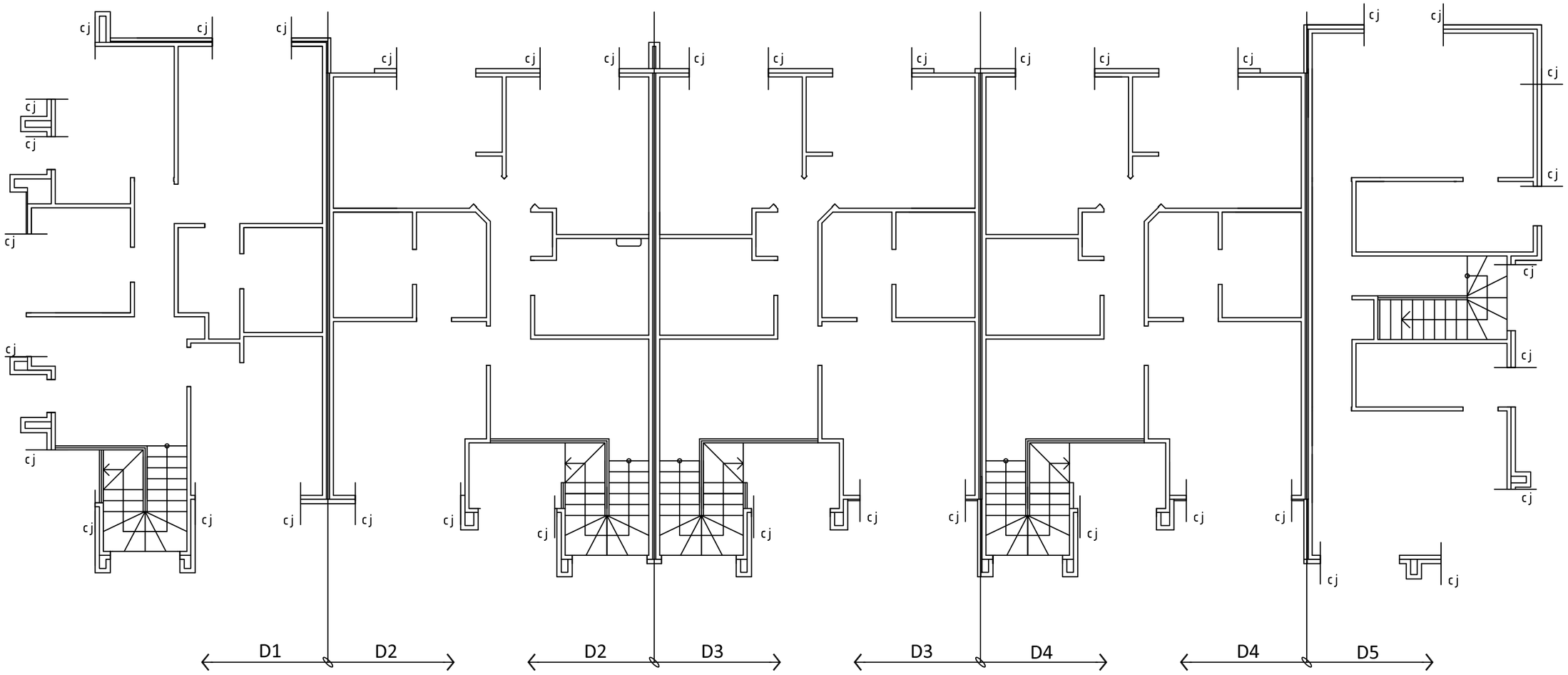

FIRST FLOOR ARTICULATION JOINT LAYOUT.

ISSUE	DATE	AMENDMENT	APPROVED
A	21/06/18	FOR APPROVAL/CONSTRUCTION	KP

KPU SQUARED ENGINEERING

SUITE 4, GROUND LEVEL
166-168 GRANGE ROAD,
FLINDERS PARK SA 5025
PH: 0413 991 106

PROJECT PROPOSED RESIDENCES

AT: 541 ANZAC HIGHWAY
GLENELG EAST

FOR: WP PROPERTY GROUP

DRAWING TITLE STRUCTURAL PLAN

SCALE	DRAWN	ENGINEER	DATE
1:100	MH	MH	21/06/2018

CHECKED	PROJECT No.	DRAWING No.	ISSUE	SHEET SIZE
KP	161104	SD-2	A	A3

KP SQUARED ENGINEERING PTY LTD
Structural and Civil Engineers
Suite 4, Ground Level,
166-168 Grange Road,
Flinders Park SA 5025
ABN 51 317 597 317
ACN 168 153 188
www.kpsquared.com.au

© COPYRIGHT RESERVED

DRAWING TITLE:

STANDARD DETAILS

CORNER REINFORCEMENT & SERVICE PENETRATION DETAILS

NOT TO SCALE

CORNER LAP LENGTHS

N12,N16,N20 - 500mm
N24,N28,N32 - 1000mm

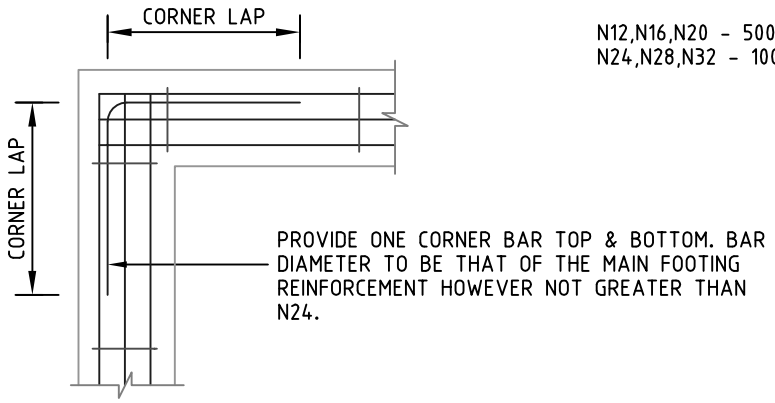

NOTE: STRIP FOOTINGS ON CLASS 'E' SITES SHALL HAVE 2 CORNER BARS TOP & BOTTOM.

CORNER REINFORCEMENT - ALL SITES

PENETRATIONS AT MIDDLE THIRD OF FOOTING ARE PREFERRED WITH 500mm (MIN) COVER TO REINFORCEMENT. DEEPENING OF FOOTING IS NOT REQUIRED IN THIS CASE.

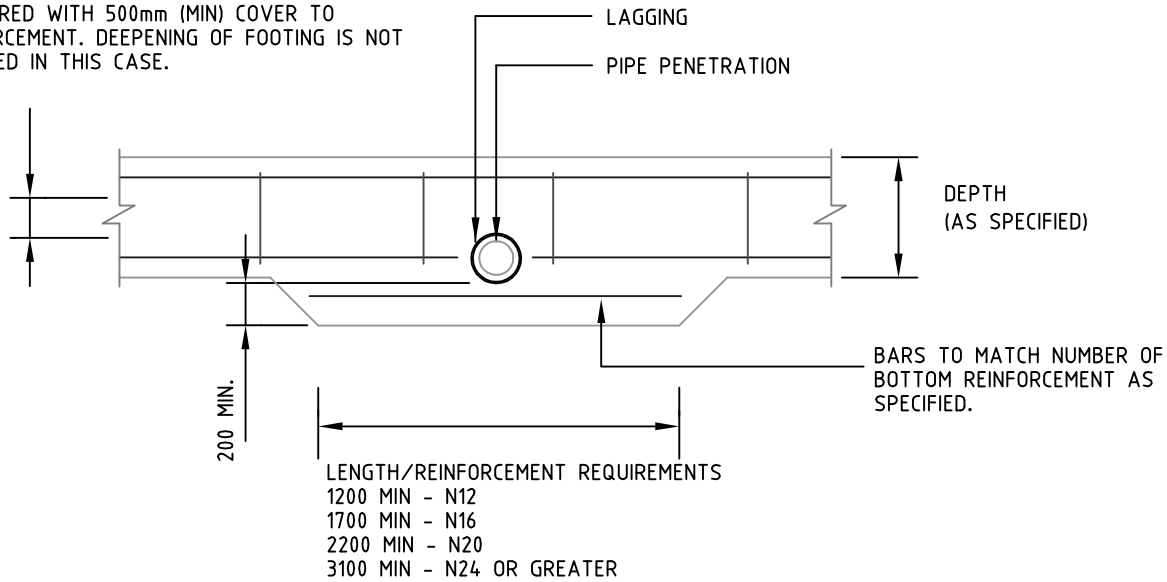

CLASS - S.M - 20mm THICK LAGGING (CLOSED CELL NOT NECESSARY)
CLASS - H,E - 20mm THICK CLOSED CELL POLYETHYLENE LAGGING
CLASS - P - 40mm THICK CLOSED CELL POLYETHYLENE LAGGING
NOTE: THE MOST STRINGENT CLASS ALWAYS APPLIES

FOOTING SERVICE PENETRATION DETAIL

KP SQUARED ENGINEERING PTY LTD
Structural and Civil Engineers
Suite 4, Ground Level,
166-168 Grange Road,
Flinders Park SA 5025
ABN 51 317 597 317
ACN 168 153 188
www.kpsquared.com.au

© COPYRIGHT RESERVED

DRAWING TITLE:

STANDARD DETAILS

STEPS IN FOOTINGS DETAILS

NOT TO SCALE

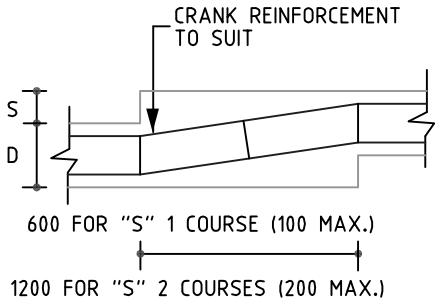

OPTION 1

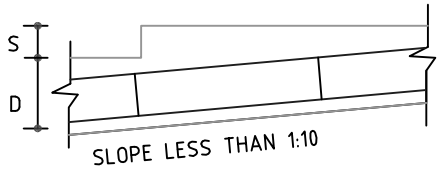

OPTION 2

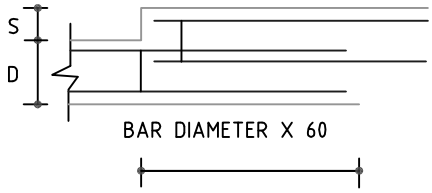

OPTION 3

STEP 'S' 2 COURSES - (200 OR LESS)

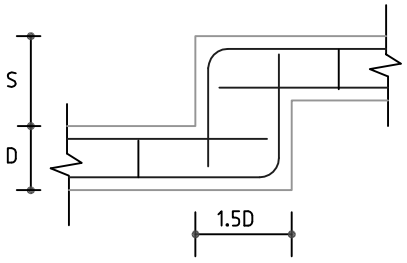

STEP 'S' GREATER THAN 200, LESS THAN '2D'

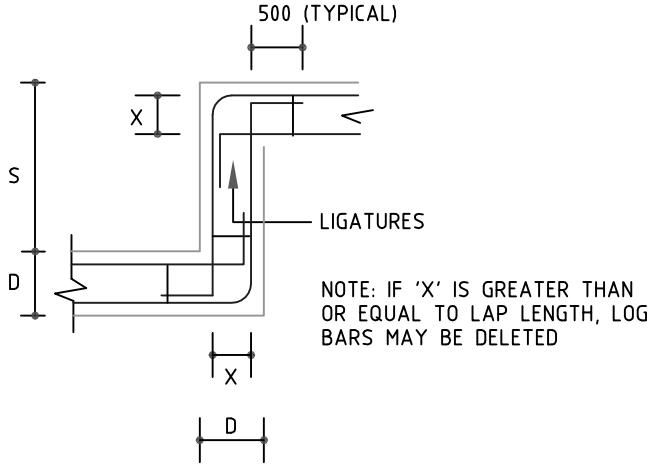

STEP 'S' GREATER THAN '2D' (DROP PIER)

KP SQUARED ENGINEERING PTY LTD
Structural and Civil Engineers
Suite 4, Ground Level,
166-168 Grange Road,
Flinders Park SA 5025
ABN 51 317 597 317
ACN 168 153 188
www.kpsquared.com.au

© COPYRIGHT RESERVED

DRAWING TITLE:

STANDARD DETAILS
DETAILS FOR FLEXIBLE SERVICE CONNECTIONS - CLASS E & E SITES, STORMWATER & SEWER

NOT TO SCALE

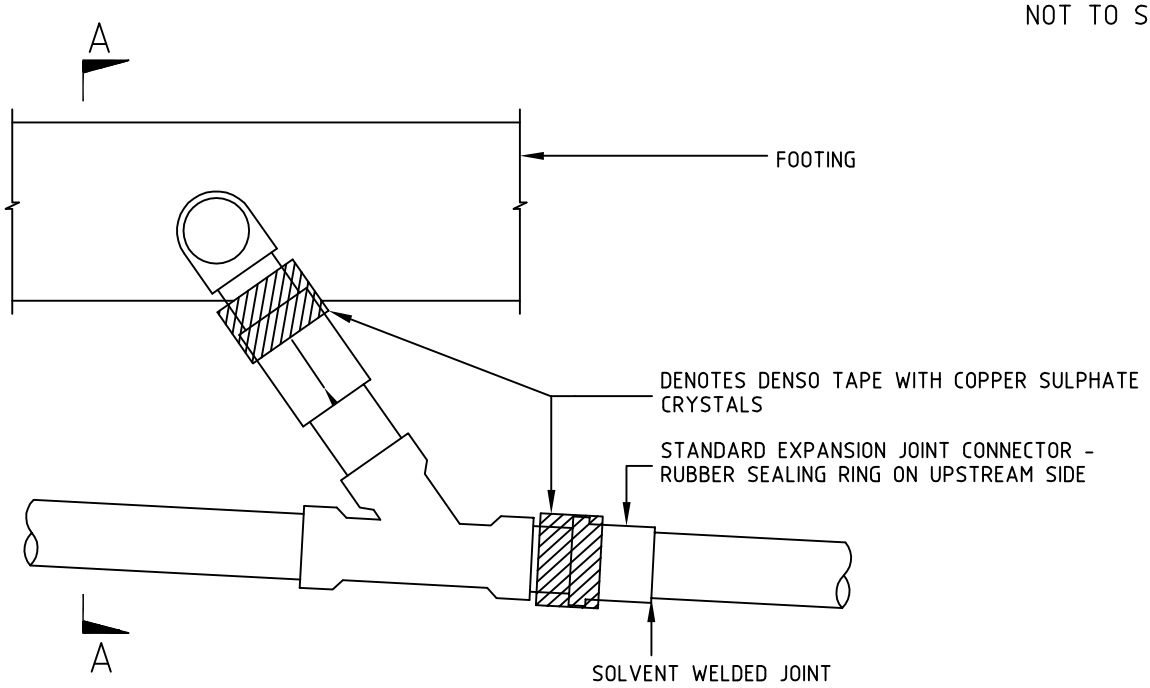

SIDE ELEVATION

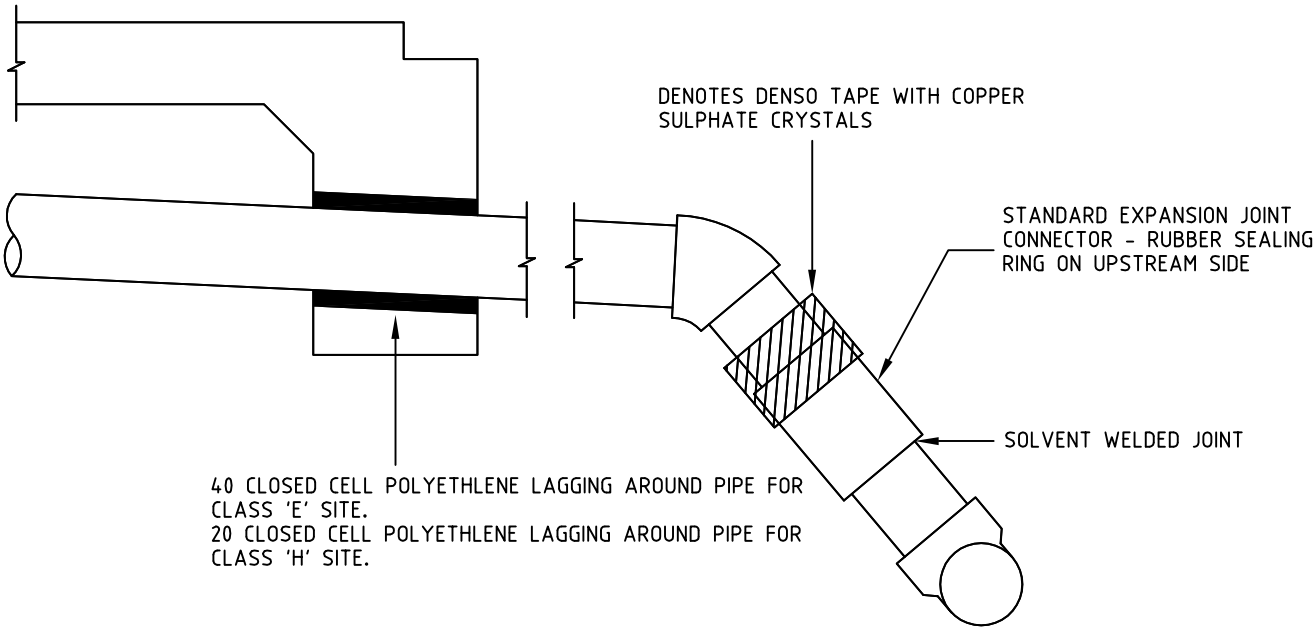

SECTION A-A

NOTES
DUE TO THE MOISTURE REACTION NATURE OF SOILS ON CLASS H, E SITES, IT IS REQUIRED THAT THE SERVICE PIPES INCLUDE STANDARD EXPANSION TYPE JOINT COUPLINGS. PROVIDE A FLEXIBLE CONNECTION TO PIPES IN ACCORDANCE WITH THE FOLLOWING:
1. CONNECTIONS ARE REQUIRED AT EACH LOCATION WHERE ANY PIPES (65MM OR LARGER) PENETRATE OR PASS BENEATH THE EXTERNAL FOOTING BEAMS.
2. TWO EXPANSION JOINT CONNECTORS ARE REQUIRED AT EACH CONNECTION.
3. DENSO TAPE MUST BE SPRINKLED WITH COPPER SULPHATE CRYSTALS BEFORE WRAPPING & MUST EXTEND 50MM PAST JOINT EITHER SIDE.
4. DETAILS APPLICABLE TO SEWER & STORMWATER PIPES.

KP SQUARED ENGINEERING PTY LTD
Structural and Civil Engineers
Suite 4, Ground Level,
166-168 Grange Road,
Flinders Park SA 5025
ABN 51 317 597 317
ACN 168 153 188
www.kpsquared.com.au

© COPYRIGHT RESERVED

DRAWING TITLE:

STANDARD DETAILS

FOOTING DETAILS ON CUT & FILLED SITES

NOT TO SCALE

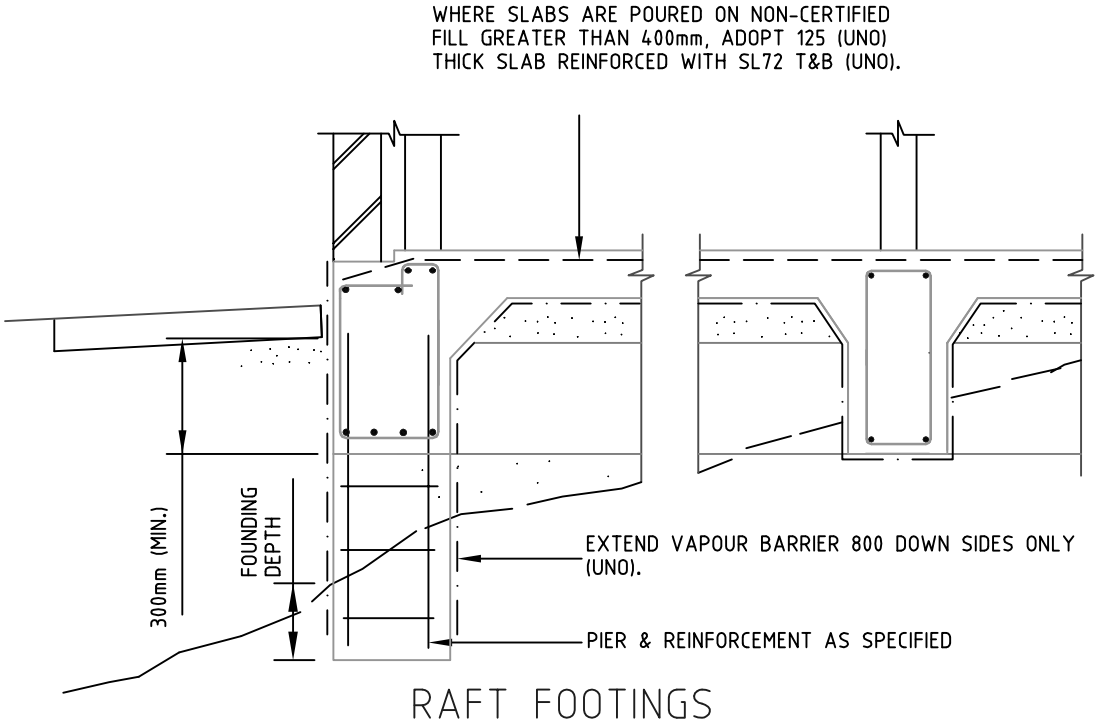

RAFT FOOTINGS

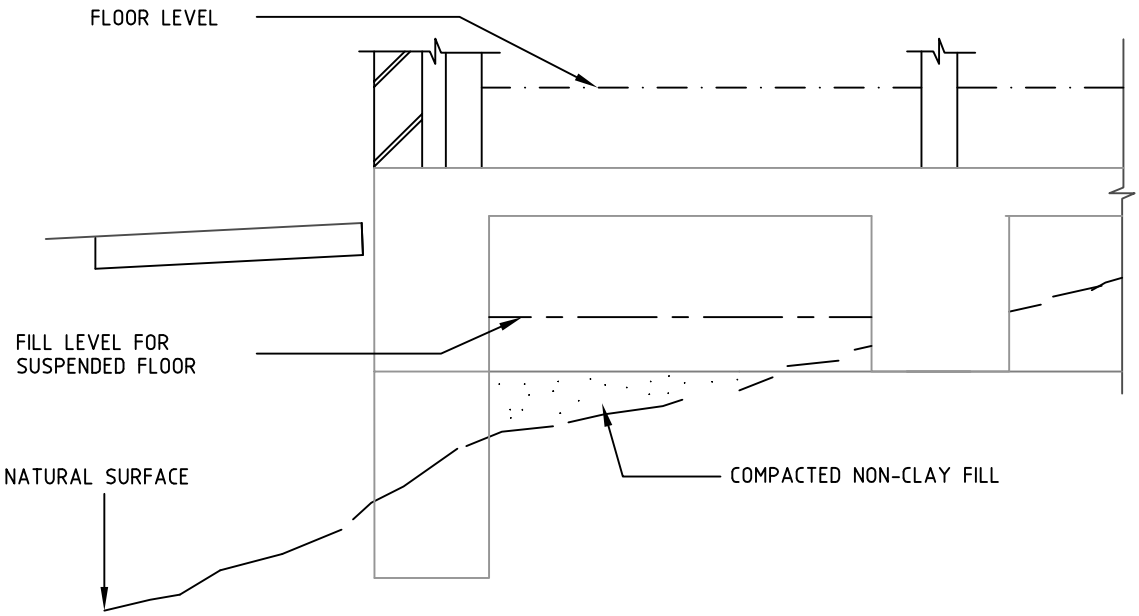

STRIP FOOTINGS

NOTES
1. TRENCHED/BORED PIERS GREATER THAN 1000 DEEP BELOW FOOTING LEVEL MUST BE POURED AT LEAST 24 HOURS PRIOR TO MAIN POUR.
2. PIERS GREATER THAN 1000 DEEP MUST BE REINFORCED WITH 6N12 VERTICAL RODS (UNO).
3. SPACING OF LIGATURES BETWEEN PIERS TO BE REDUCED TO 300C/C (UNO).

KP SQUARED ENGINEERING PTY LTD
Structural and Civil Engineers
Suite 4, Ground Level,
166-168 Grange Road,
Flinders Park SA 5025
ABN 51 317 597 317
ACN 168 153 188
www.kpsquared.com.au

© COPYRIGHT RESERVED

DRAWING TITLE:

STANDARD DETAILS

ARTICULATION JOINT DETAILS IN WALLS

NOT TO SCALE

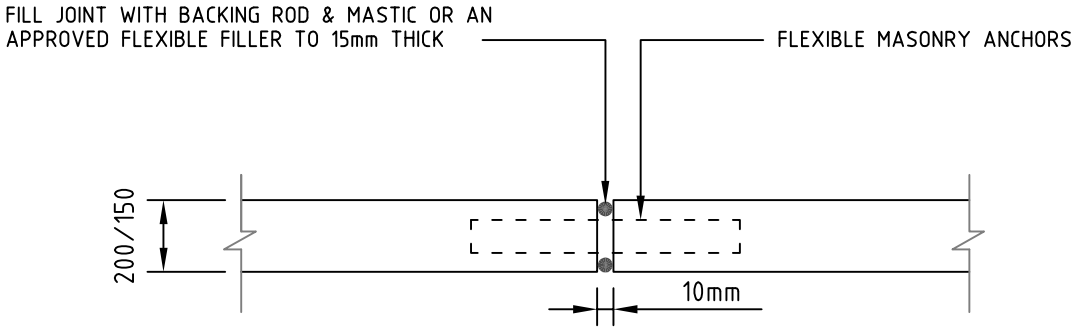

ARTICULATION JOINT DETAIL IN AAC BLOCK WALL

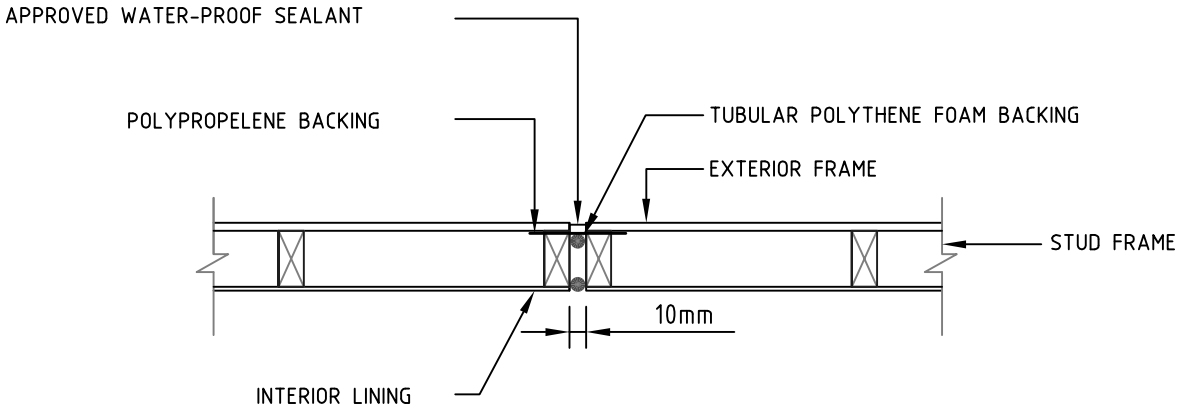

LIGHTWEIGHT WALL CONSTRUCTION

KP SQUARED ENGINEERING PTY LTD
Structural and Civil Engineers
Suite 4, Ground Level,
166-168 Grange Road,
Flinders Park SA 5025
ABN 51 317 597 317
ACN 168 153 188
www.kpsquared.com.au

© COPYRIGHT RESERVED

DRAWING TITLE:

STANDARD DETAILS

ARTICULATION JOINT DETAILS IN WALLS

NOT TO SCALE

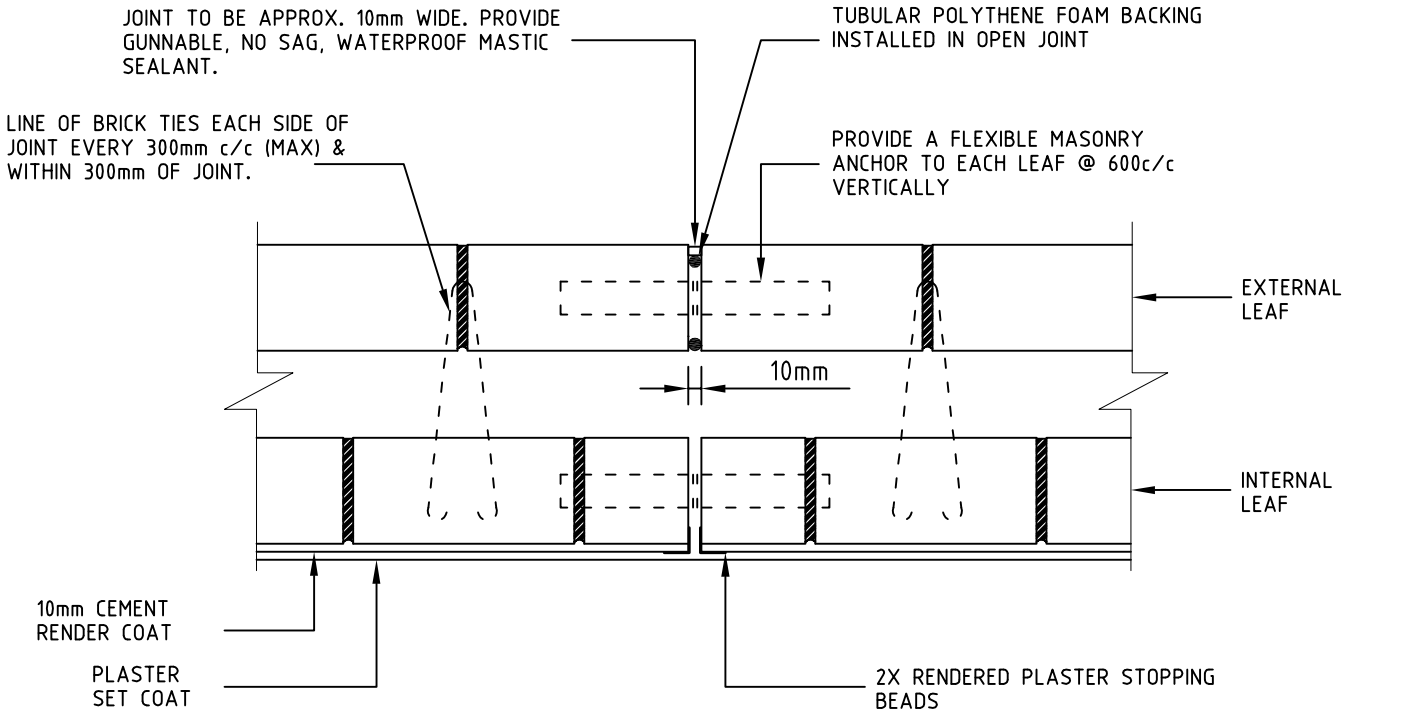

SOLID MASONRY CONSTRUCTION

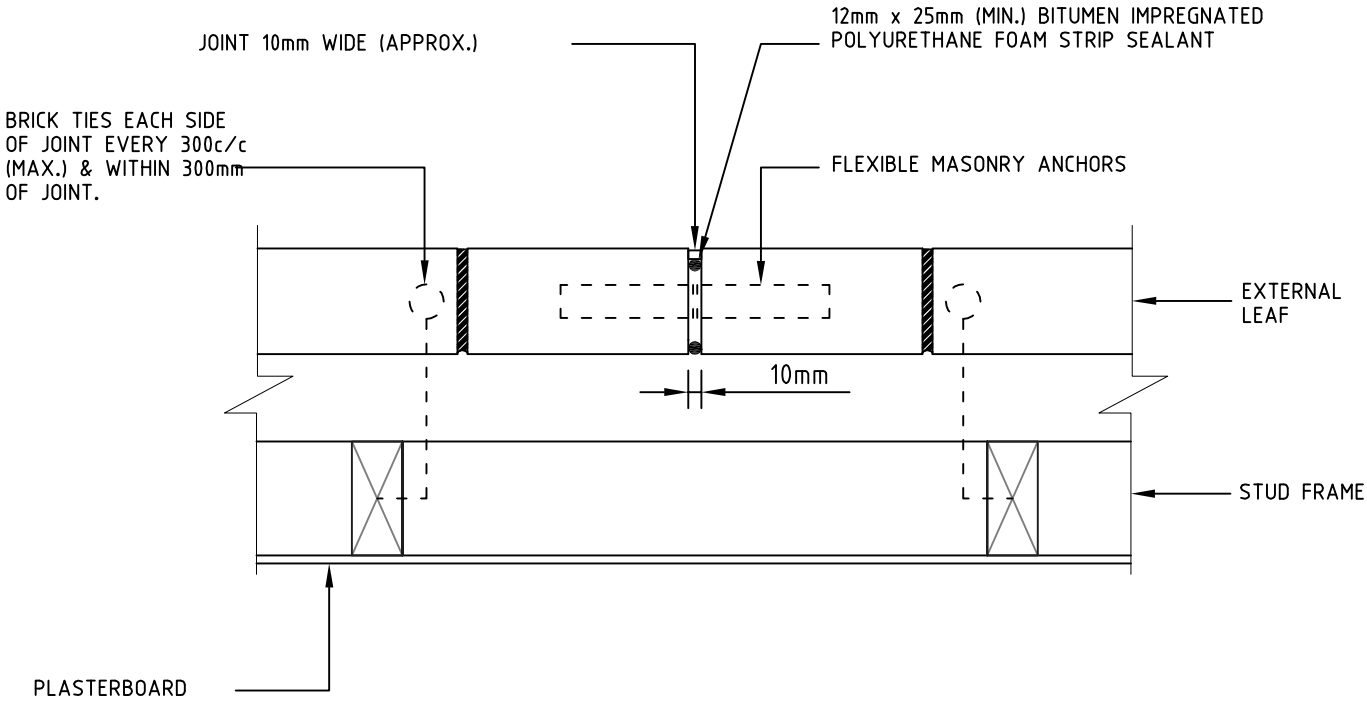

MASONRY VENEER CONSTRUCTION

KP SQUARED ENGINEERING PTY LTD
Structural and Civil Engineers
Suite 4, Ground Level,
166-168 Grange Road,
Flinders Park SA 5025
ABN 51 317 597 317
ACN 168 153 188
www.kpsquared.com.au

© COPYRIGHT RESERVED

DRAWING TITLE:

STANDARD DETAILS

TYPICAL RAFT FOOTING DETAILS

NOT TO SCALE

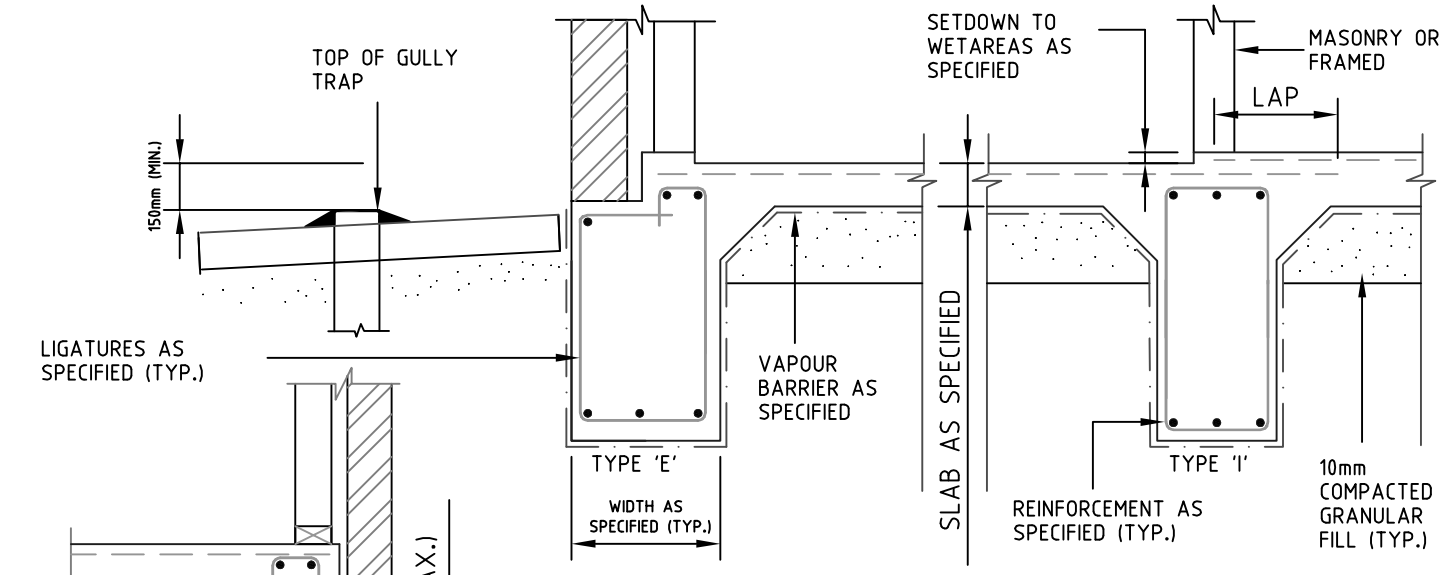

TYPICAL RAFT FOOTING DETAIL

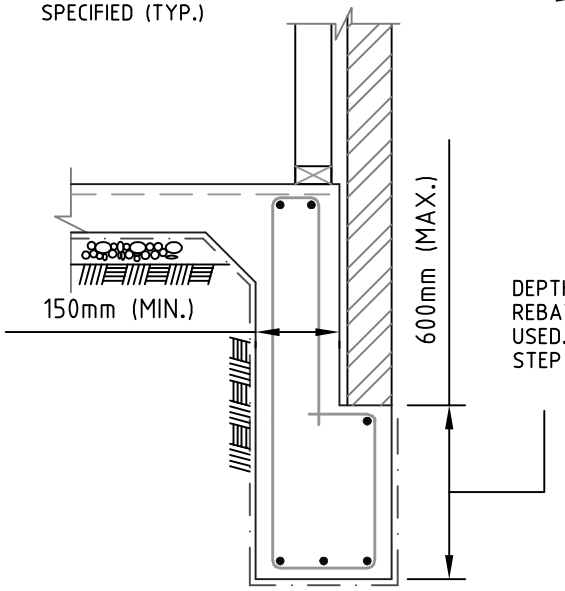

DEPTH MINUS 86 IF REBATE LIGATURE IS USED. IF NOT REFER TO STEP IN FLOOR DETAIL.

NOTES
1. WHEN FOOTING DEPTH EXCEEDS 800mm VAPOUR BARRIER SHALL EXTEND DOWN SIDES OF FOOTING ONLY.
2. PROVIDE TWO LAYERS OF VAPOUR BARRIER TO THE FULL DEPTH OF EACH SIDE WHEN THE FOOTING DEPTH EXCEEDS 1000mm.

DEEP EDGE REBATE DETAIL

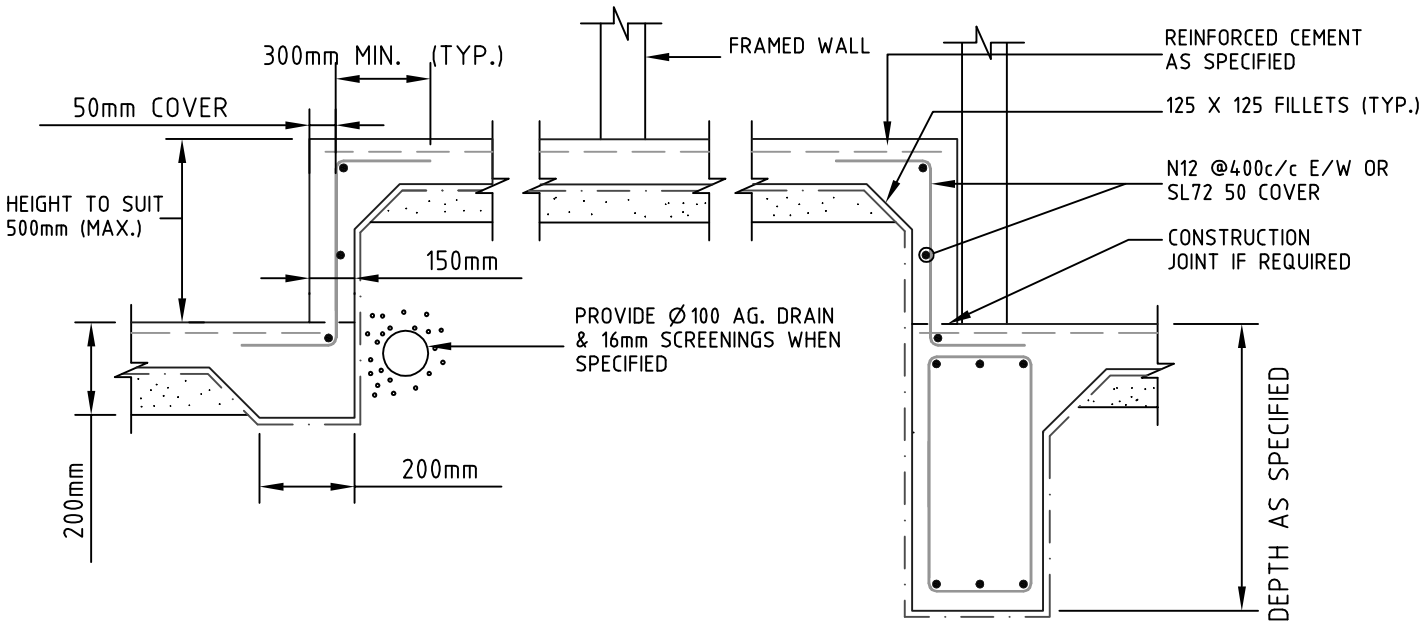

STEPS IN FLOORS

KP SQUARED ENGINEERING PTY LTD
Structural and Civil Engineers
Suite 4, Ground Level,
166-168 Grange Road,
Flinders Park SA 5025
ABN 51 317 597 317
ACN 168 153 188
www.kpsquared.com.au

© COPYRIGHT RESERVED

DRAWING TITLE:

STANDARD DETAILS

TYPICAL RAFT FOOTING DETAILS

NOT TO SCALE

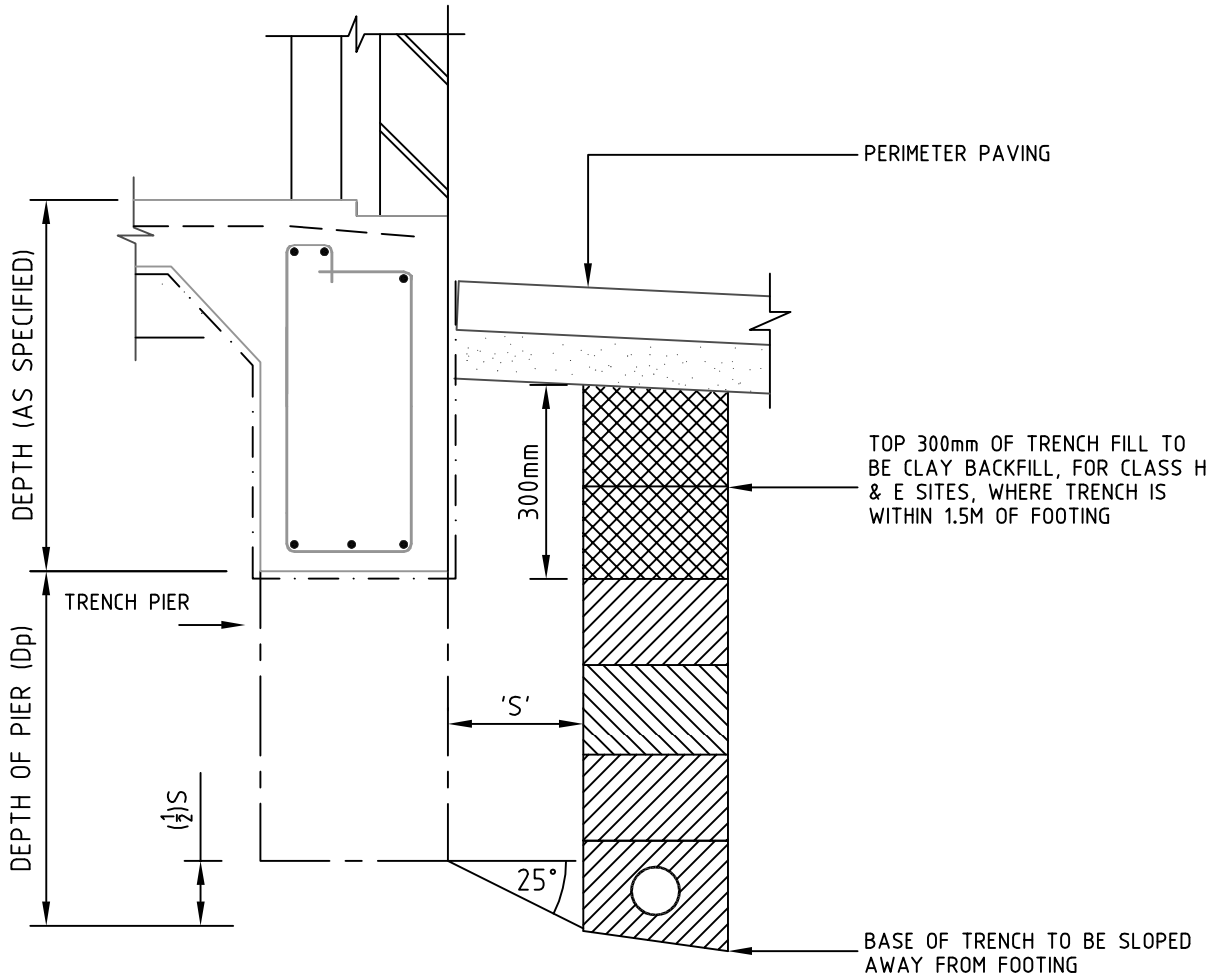

FOOTING REQUIREMENTS ADJACENT PIPE TRENCHES

NOTES

1. WHEN THE DEPTH 'Dp' EXCEEDS DISTANCE (½)S PROVIDE A MINIMUM OF 1000 LONG MASS CONCRETE PIERS. PIERS TO BE THE WIDTH OF THE FOOTING BEAM SPACED AT 3000 (MAX.) CENTRES TO THE DEPTH AS SHOWN. SPACING OF LIGATURES IN THE FOOTING BEAMS MUST BE REDUCED TO 300c/c BETWEEN PIERS.
2. ALTERNATIVELY, THE TRENCH MAY BE BACKFILLED WITH GRANULAR MATERIAL (NON CLAY) IN 150mm (MAX.) LAYERS. EACH LAYER MUST BE COMPACTED TO A DENSITY OF 95% IN ACCORDANCE WITH AS 1289.

KP SQUARED ENGINEERING PTY LTD
Structural and Civil Engineers
Suite 4, Ground Level,
166-168 Grange Road,
Flinders Park SA 5025
ABN 51 317 597 317
ACN 168 153 188
www.kpsquared.com.au

© COPYRIGHT RESERVED

DRAWING TITLE:

STANDARD DETAILS

TYPICAL STRIP FOOTING DETAILS

NOT TO SCALE

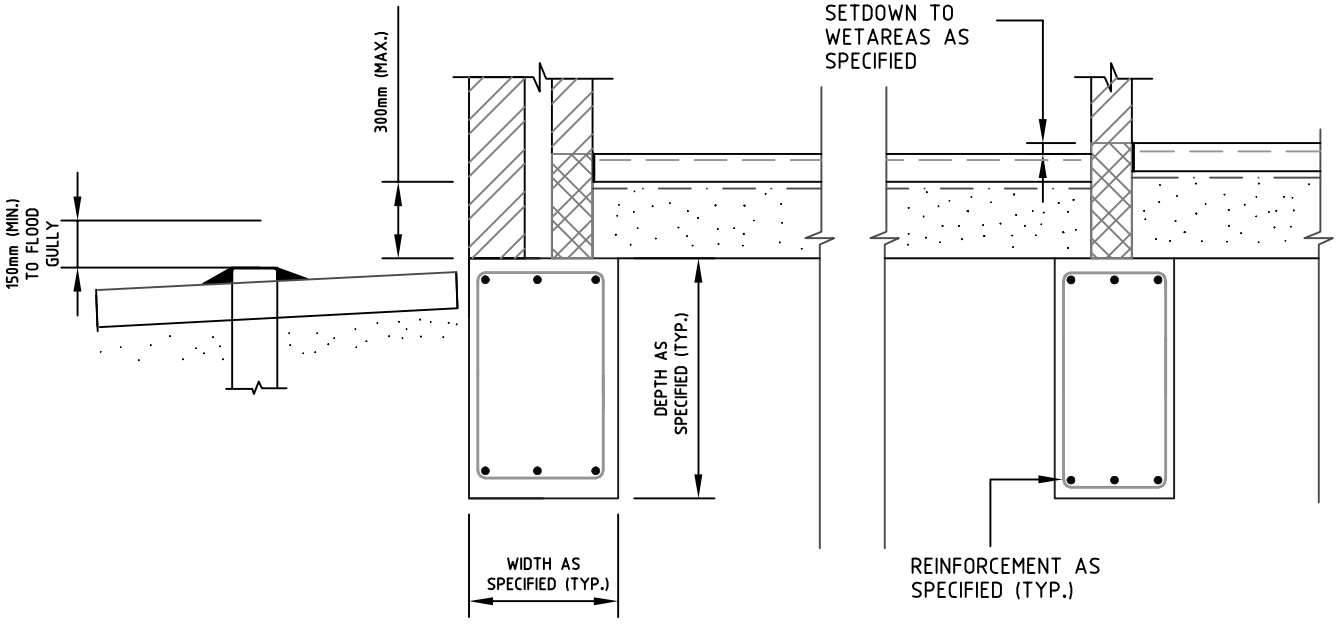

NOTE: NOT RECOMMENDED ON CLASS H & E SITES UNLESS NOTED OTHERWISE FOR CARPORTS.

FLOATING SLAB DETAIL

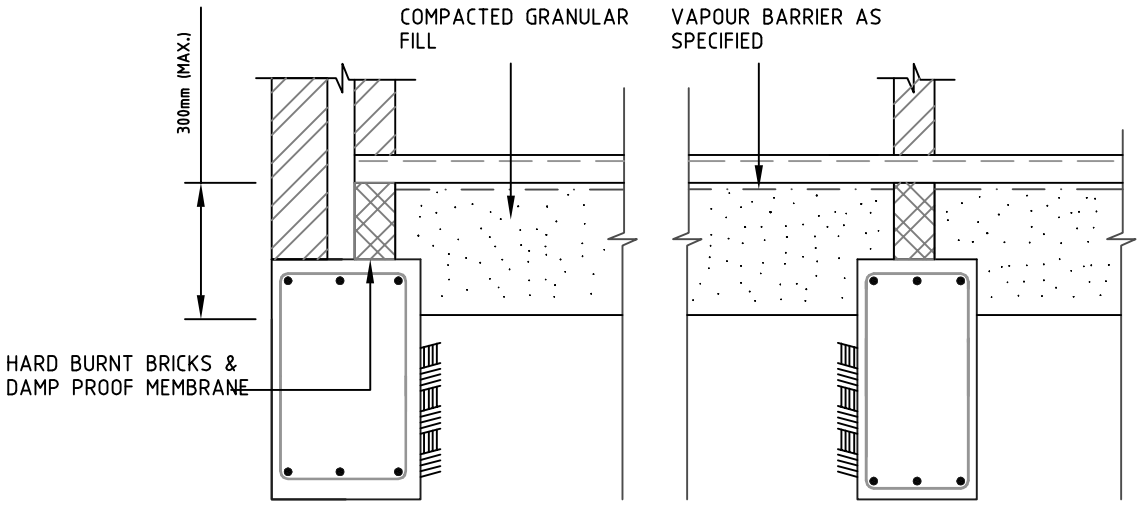

NOTE: NOT RECOMMENDED ON CLASS H & E SITES.

SLAB POURED AFTER BRICK BUILD-UP

KP SQUARED ENGINEERING PTY LTD
Structural and Civil Engineers
Suite 4, Ground Level,
166-168 Grange Road,
Flinders Park SA 5025
ABN 51 317 597 317
ACN 168 153 188
www.kpsquared.com.au

© COPYRIGHT RESERVED

DRAWING TITLE:

STANDARD DETAILS

TYPICAL STRIP FOOTING DETAILS

NOT TO SCALE

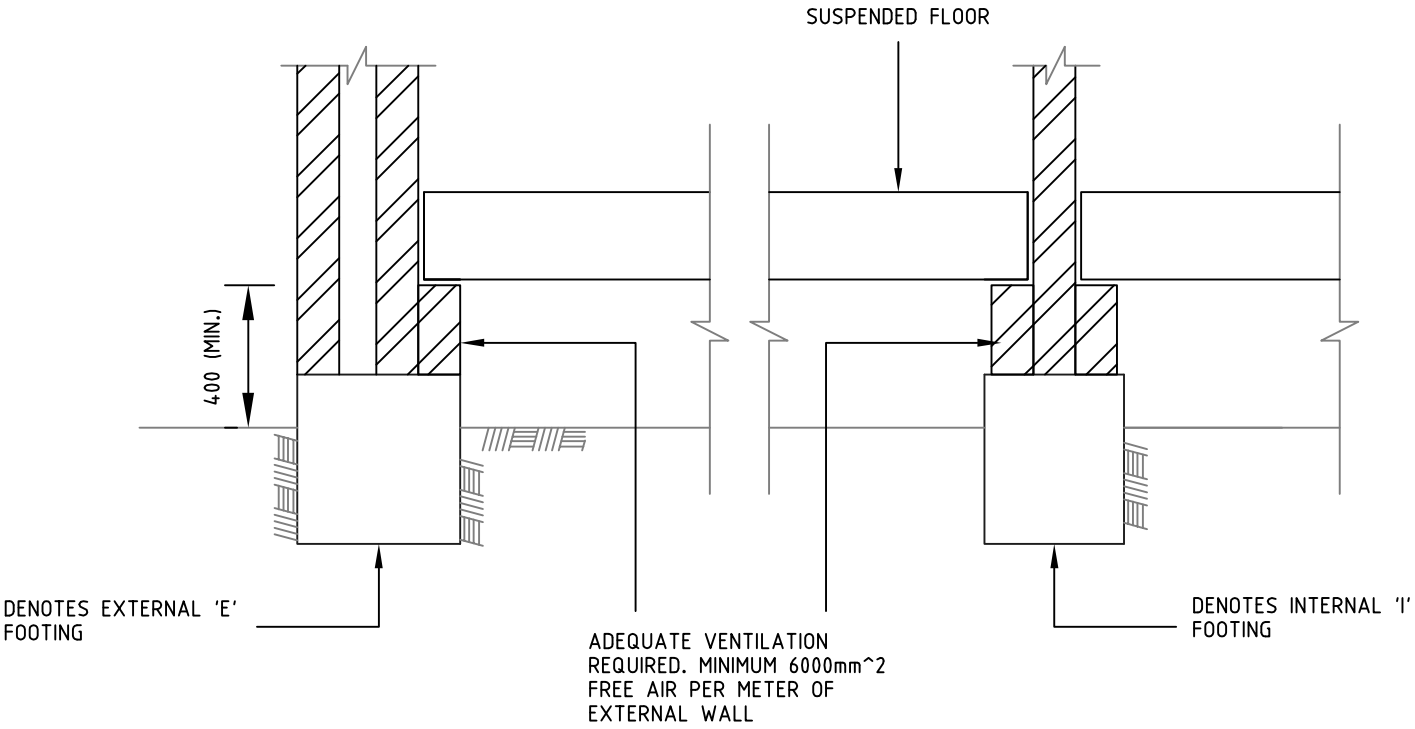

SUSPENDED FLOOR

KP SQUARED ENGINEERING PTY LTD
Structural and Civil Engineers
Suite 4, Ground Level,
166-168 Grange Road,
Flinders Park SA 5025
ABN 51 317 597 317
ACN 168 153 188
www.kpsquared.com.au

© COPYRIGHT RESERVED

DRAWING TITLE:

STANDARD DETAILS

TYPICAL PAVING DETAILS

NOT TO SCALE

NOTES
1. PAVING MUST NOT BRIDGE THE DAMP PROOF MEMBRANE (DPM).
2. PAVING SHALL BE GRADED SUFFICIENTLY TO ENSURE ALL WATER CAN DRAIN CLEAR FROM THE BUILDING
3. PROVIDE EDGE DRAINS WHERE NECESSARY TO DIVERT RUNOFF CLEAR OF THE BUILDING
4. REFER TO CRG (SECTION 6) FOR PAVING SPECIFICATIONS INCLUDING FALLS, THICKNESSES AND REINFORCEMENT
5. PROVIDE TERMITE PROTECTION TO AS 3660.1

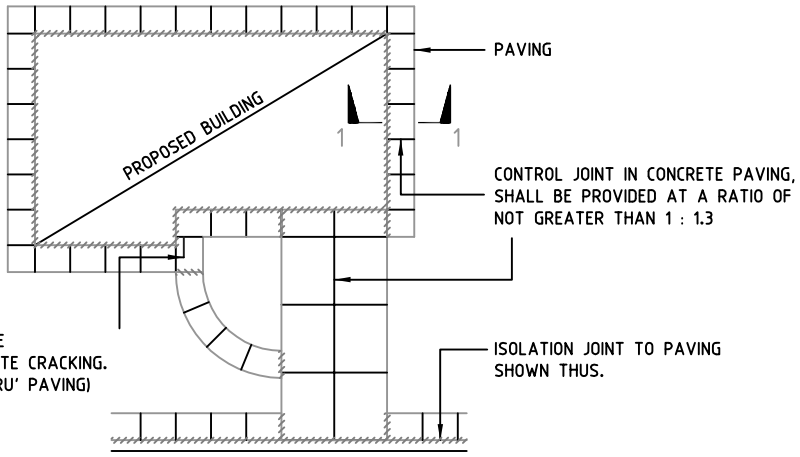

PLAN OF PAVING AROUND BUILDING

ENSURE THAT WEAKNESS IS FORMED ALONG LINE OF JOINT BY CHOPPING OR FORCING TROWEL THROUGH CONCRETE ALONG LINE TO SEPARATE CONCRETE AGGREGATES

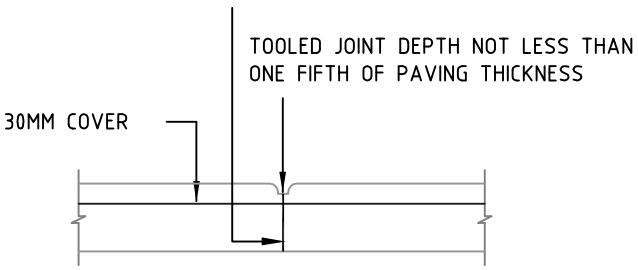

SECTION THROUGH CONTROL IN CONCRETE PAVING

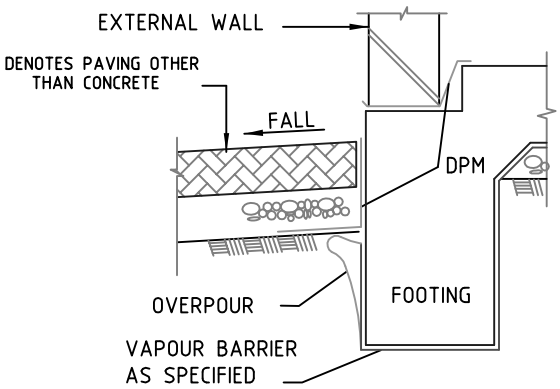

FOOTING PAVING JUNCTION DETAIL (IF OVERPOUR EXISTS)

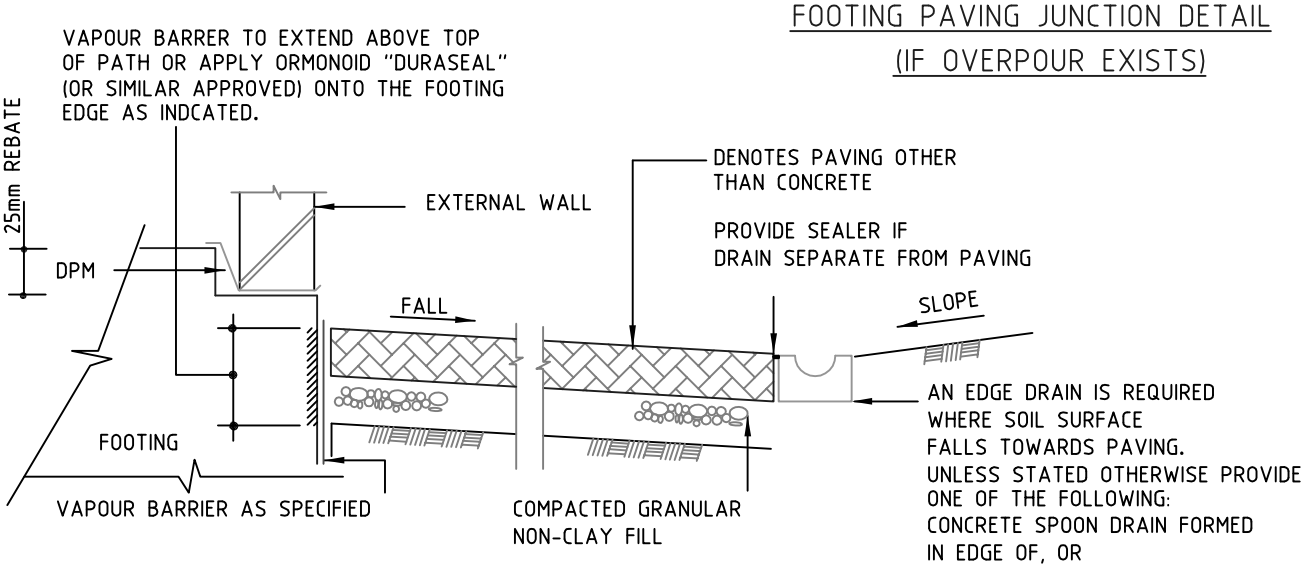

SECTION 1-1

FOOTING PAVING JUNCTION DETAIL

KP SQUARED ENGINEERING PTY LTD
Structural and Civil Engineers
Suite 4, Ground Level,
166-168 Grange Road,
Flinders Park SA 5025
ABN 51 317 597 317
ACN 168 153 188
www.kpsquared.com.au

© COPYRIGHT RESERVED

DRAWING TITLE:

STANDARD DETAILS

TYPICAL STORMWATER DETAILS

NOT TO SCALE

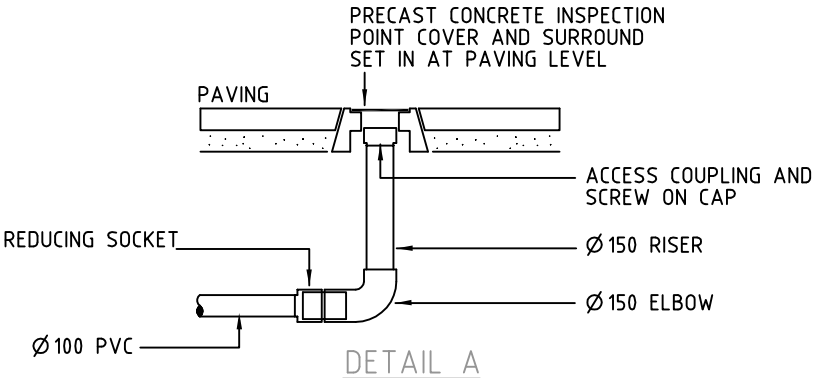

DETAIL A

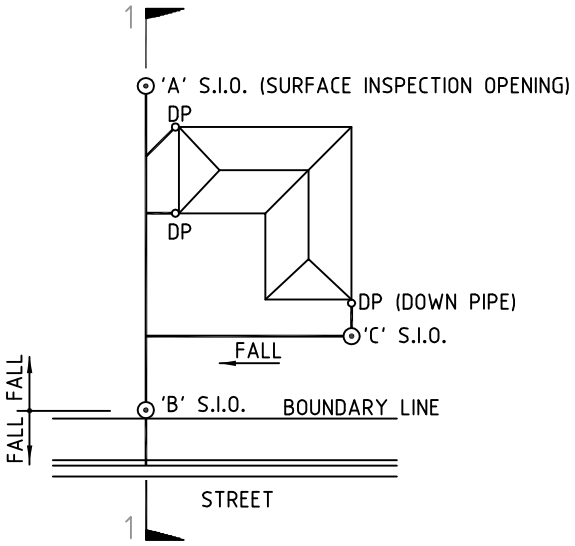

PLAN

NOTES:

'C' DENOTES RISER AND SCREW ON INSPECTION CAP AT FINISH SURFACE LEVEL OR CLEANING EYE IN DOWNPIPE FOR RODDING (AND / OR FLUSHING) PURPOSES AT 'DEAD END' BRANCHES
STORMWATER PIPES TO HAVE A MIN. FALL OF 1.0% (1 IN 100)

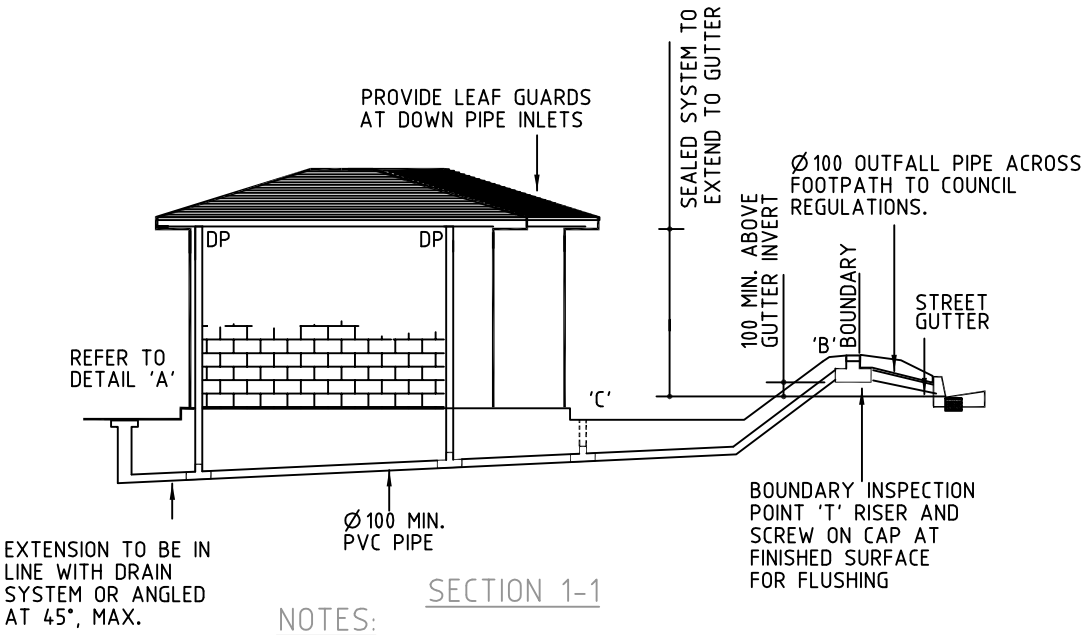

SECTION 1-1

NOTES:

1. DO NOT USE SEAMED SHEET METAL DOWN PIPES OR FITTINGS WITH A PRESSURISED SYSTEM.
2. NO SURFACE INLETS (SUMPS OR GRATED INLET PITS) PERMITTED INTO SEALED SYSTEM
3. SEALED SYSTEM TO BE CONSTRUCTED TO PRESSURE LINE STANDARD (SOLVENT WELDED JOINTS FOR PVC PIPES) STATIC TESTED BEFORE BACKFILLING.
4. FLUSHING AND MAINTENANCE IS THE RESPONSIBILITY OF THE OWNER

DOMESTIC SEALED DRAINAGE SYSTEM (PRESSURISED)

SOIL BORELOG

Job Number: 161104

Site: 541 Anzac Highway, Glenelg North

Date: 7/13/2017

	Bore 1 Depth in mm	Bore 2 Depth in mm	Bore 3 Depth in mm	Soil Description	Texture	Colour	FMC	Reactivity	EST Ipt	Bearing	Symbol
	0-400	0-400	0-350	Mixture sand/ sandy silty clay	-	Dark brown mottled	-	-	(015)	-	Fill
	400-700	400-650	350-800	Clay silty	H	Black	dry	H	035	M	CH
	700-800	650-800	800-1000	Clay silty, trace sand calcareous	H	Yellowish brown mottled	dry	M	02	M	CL
	800	800	1000	Refusal (very high resistance)							

Abbreviations and Symbols

MC Moisture Content

PL Plastic Limit

> Greater than

< Less than

- Approximately equal to

DCP Penetrometer

Consistency

VS Very Soft

S Soft

F Firm

St Stiff

VSt Very Stiff

H Hard

Density

Fb Friable

VL Very loose

L Loose

M Medium Dense

D Dense

VD Very Dense

Moisture

D Dry

SM Slightly/Moist

M Moist

W Wet

Sat Saturated

da damp

Plasticity/Reactivity

L Low

M Medium

H High

NP Non Plastic

OMC Optimum MC

USCS Abbreviations

GW,GP,GM,GC

SW,SP,SM,SC

ML,MH, CL,CH

COMMENTS

1 Soil profile posesses **EXREME** potential for active movement, (shrinkage and swelling due to soil moisture variations).

2 Magnitude of active movement would be of the order of **105.0 mm.**

3 With reference to AS 2870 - 2011 the site is classified as Class **"E-D, P (FILL/TREES)".**

SOIL BORELOG

Job Number: 161104

Site: 541 Anzac Highway, Glenelg North

Date: 6/20/2018

	Bore 1 Depth in mm	Bore 2 Depth in mm	Bore 3 Depth in mm	Soil Description	Texture	Colour	FMC	Reactivity	EST Ipt	Bearing	Symbol
	0-400	0-400	0-350	Mixture sand/ sandy silty clay	-	Dark brown mottled	-	-	(015)	-	Fill
	400-700	400-650	350-800	Clay silty	H	Black	dry	H	035	M	CH
	700-800	650-800	800-1000	Clay silty, trace sand calcareous	H	Yellowish brown mottled	dry	M	02	M	CL
	800	800	1000	Refusal (very high resistance)							

Abbreviations and Symbols

MC Moisture Content

PL Plastic Limit

> Greater than

< Less than

- Approximately equal to

DCP Penetrometer

Consistency

VS Very Soft

S Soft

F Firm

St Stiff

VSt Very Stiff

H Hard

Density

Fb Friable

VL Very loose

L Loose

M Medium Dense

D Dense

VD Very Dense

Moisture

D Dry

SM Slightly/Moist

M Moist

W Wet

Sat Saturated

da damp

Plasticity/Reactivity

L Low

M Medium

H High

NP Non Plastic

OMC Optimum MC

USCS Abbreviations

GW,GP,GM,GC

SW,SP,SM,SC

ML,MH, CL,CH

COMMENTS

1 Soil profile posesses **EXTREME** potential for active movement, (shrinkage and swelling due to soil moisture variations).

2 Magnitude of active movement would be of the order of **105.0 mm.**

3 With reference to AS 2870 - 2011 the site is classified as Class **"E-D, P (FILL/TREES)".**

SOIL BORELOG

Job Number: 161104

Site: 541 Anzac Highway, Glenelg North

Date: 6/20/2018

Bore 4 Depth in mm	Bore 5 Depth in mm	Bore 6 Depth in mm	Bore 7 Depth in mm	Soil Description	Texture	Colour	FMC	Reactivity	EST Ipt	Bearing	Symbol
0-150	0-100	0-150	0-150	Mixture silty sandy clay/ gravels	-	Grey mottled	-	-	(015)	-	Fill
150-550	100-550	150-650	150-650	Clay silty	VSt	Dark grey	at PL	H	035	M	CH
550-950	550-1150	650-1200	650-1150	Clay silty	H	Brown mottled	<PL	H	035	M	CH
950-1500	1150-1500	1200-2150	1150-2250	Clay silty sandy	VF	Orange/ red mottled	≥PL	H	03	M	CH
1500-2350	1500-2150	-	-	Clay sandy silty	F	Orange brown	>PL	M	02	M	CL
-	-	2150-3000	2250-3000	Clay silty traces lime	VSt	Brown mottled few cream patches	at PL	H	035	M	CH
2350-2800	2150-2800	-	-	Clay silty sandy	VF	Orange mottled	>PL	H	03	M	CH
2800-3000	2800-3000	-	-	Clay silty, trace sand	H	Brown	at PL	H	035	M	CH

Abbreviations and Symbols

MC Moisture Content
PL Plastic Limit
> Greater than
< Less than
- Approximately equal to
DCP Dynamic Cone Penetrometer

Consistency

VS Very Soft
S Soft
F Firm
St Stiff
VSt Very Stiff
H Hard

Density

Fb Friable
VL Very loose
L Loose
M Medium Dense
D Dense
VD Very Dense

Moisture

D Dry
SM Slightly/Moist
M Moist
W Wet
Sat Saturated
da damp

Plasticity/Reactivity

L Low
M Medium
H High
NP Non Plastic
OMC Optimum MC

USCS Abbreviations	COMMENTS
GW,GP,GM,GC	1 Soil profile posesses **EXTREME** potential for active movement, (shrinkage and swelling due to soil moisture variations).
SW,SP,SM,SC	2 Magnitude of active movement would be of the order of **105.0 mm.**
ML,MH, CL,CH	3 With reference to AS 2870 - 2011 the site is classified as Class **"E-D, P (FILL/TREES)".**

SOIL BORELOG

Job Number: 161104

Site: 541 Anzac Highway, Glenelg North

Date: 6/20/2018

Bore 8 Depth in mm				Soil Description	Texture	Colour	FMC	Reactivity	EST Ipt	Bearing	Symbol
0-150				Mixture silty sandy clay/ gravels	-	Grey mottled	-	-	(015)	-	Fill
150-650				Clay silty	VSt	Dark grey	at PL	H	035	M	CH
650-1150				Clay silty	H	Brown mottled	<PL	H	035	M	CH
1150-2100				Clay silty sandy	VF	Orange/ red mottled	≥PL	H	03	M	CH
2100-3000				Clay silty traces lime	VSt	Brown mottled few cream patches	at PL	H	035	M	CH

Abbreviations and Symbols

MC Moisture Content
PL Plastic Limit
> Greater than
< Less than
- Approximately equal to
DCP Dynamic Cone Penetrometer

Consistency

VS Very Soft
S Soft
F Firm
St Stiff
VSt Very Stiff
H Hard

Density

Fb Friable
VL Very loose
L Loose
M Medium Dense
D Dense
VD Very Dense

Moisture

D Dry
SM Slightly/Moist
M Moist
W Wet
Sat Saturated
da damp

Plasticity/Reactivity

L Low
M Medium
H High
NP Non Plastic
OMC Optimum MC

USCS Abbreviations

GW,GP,GM,GC
SW,SP,SM,SC
ML,MH, CL,CH

COMMENTS

1 Soil profile posesses **EXTREME** potential for active movement, (shrinkage and swelling due to soil moisture variations).
2 Magnitude of active movement would be of the order of **105.0 mm.**
3 With reference to AS 2870 - 2011 the site is classified as Class **"E-D, P (FILL/TREES)".**

KPU SQUARED ENGINEERING
SUITE 4, GROUND LEVEL
166-168 GRANGE ROAD,
FLINDERS PARK SA 5025
PH: 0413 991 106

DATE: JUN '18
JOB NO: 161104

BHLP-1

BOREHOLE LOCATION PLAN

541 ANZAC HIGHWAY
GLENELG NORTH

WHERE EXISTING STRUCTURES ARE TO BE REMOVED, PRE-WETTING IS MANDATORY.

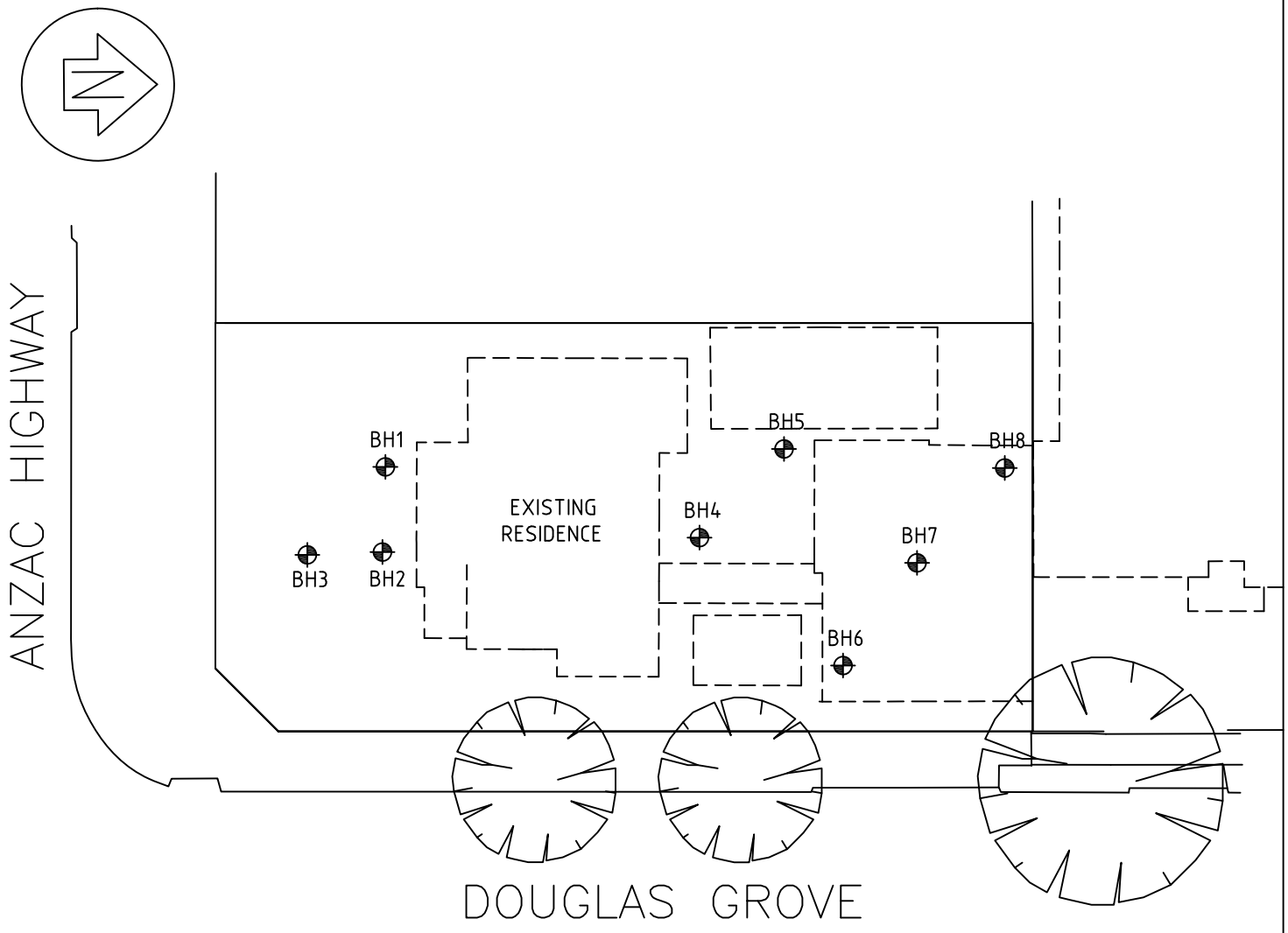

NOTES

1. CORE DEPTHS

H1- 0.8m
H2- 0.8m
H3- 1.0m
H4- 3.0m
H5- 3.0m
H6- 3.0m
H7- 3.0m
H8- 3.0m

2. WATER TABLE

BORE 1	BORE 2	BORE 3	BORE 4	BORE 5
–	–	–	–	–

BORE 6	BORE 7	BORE 8
–	–	–

3. APPROX. FALL OF SITE

				✓	
1:10	1:15	1:20	1:25	OTHER	NEAR LEVEL

FALL OF SITE SHOWN IS APPROX. AND MUST NOT BE USED FOR COSTING PURPOSES.

4. SURFACE

✓				✓		✓	✓		✓		✓
DRY	MOIST	WET	SOFT	FIRM	LOOSE	HARD	GRAVEL	SAND	TREES	PAVED	GRASS

5. RESISTANCE (AVE.)

	✓	✓
LOW	MEDIUM	HIGH

6. BOTTOM RESISTANCE

	✓	✓
LOW	MEDIUM	HIGH

7. DATE DRILLED. ..06./..07./..17..
..18../..06../..18...

8. UNUSUAL FEATURES

S.A. SOIL SAMPLING

DRILLING FIELD NOTES

Client Ref No. 181104

Client: 541 ANZAC HIGHWAY

Address: GREENE NTH

Drilling Order No: 34316

Date: 6/7/17

Drill Rig: Toyota Mounted "Rockmaster"

Photo:

SITE DESCRIPTION

Surface: Concrete: ☐ Bitumen: ☐ Vacant Site: ☐ Other: ☐

Bore Location: ASR (Front only Concrete at Rear)

Approx Slope: 6/1

Slope Direction:

Drainage: Poor ☐ Average ☐ Good ☑ Large Trees (Height): PALMS 3 m

Surface Cracking: None ☑ Slight ☐ Moderate ☐ Severe ☐

Benched Site: ~~Yes~~/No Height of cut: ____ m Depth of fill: ____ m

Extent of fill on site:

Walls of existing structure: Interior ☐ ☐ ☐ ☐ ☐ ☐ (Ref AS2870)

Walls of existing structure Exterior ☐ ☐ ☐ ☐ ☐ ☐

0 1 2 3 4 5

Method: PT Pushtube; DPT Dynamic Pushtube; AV V-Bit; AR Rock Bit; PDPT Portable; HA Hand Auger

Box No.																				
Depth	Bore 1		Bore 2		Bore 3		Bore 4		Bore 5		Bore 6		Bore 7		Bore 8		Bore 9		Bore 10	
(m)	method	resist	method	resist	method	resist	method	resist	method	resist	method	resist	method	resist	method	resist	method	resist	method	resist
0																				
0.5	PDPT	↓	PDPT	↓	PDPT	↓														
1.0																				
1.5	R 0.8		R 0.5		R 1.0															
2.0																				
2.5																				
3.0																				
3.5																				
4.0																				
4.5																				
5.0																				
5.5																				
6.0																				
Water																				

Other Observations

S.A. SOIL SAMPLING

DRILLING FIELD NOTES

Client Ref No. 161104

Client:

Address: 541 ANZAC HIGHWAY GLENELG NTH

Drill Rig: Toyota Mounted "Rockmaster"

Drilling Order No: 34959

Date: 16/8

Photo:

SITE DESCRIPTION

Surface: Concrete: ☐ Bitumen: ☐ Vacant Site: ☐ Other: ☐

Bore Location: ASh

Approx Slope: 9/5 Slope Direction:

Drainage: Poor ☐ Average ☐ Good ☑ Large Trees (Height): ____ m

Surface Cracking: None ☑ Slight ☐ Moderate ☐ Severe ☐

Benched Site: ~~Yes~~/No Height of cut: ____ m Depth of fill: ____ m

Extent of fill on site:

Walls of existing structure: Interior ☐ ☐ ☐ ☐ ☐ ☐ (Ref AS2870)

Walls of existing structure Exterior ☐ ☐ ☐ ☐ ☐ ☐

0 1 2 3 4 5

Method: PT Pushtube (circled) DPT Dynamic Pushtube AV V-Bit AR Rock Bit PDPT Portable HA Hand Auger

Box No.																				
Depth	Bore 1		Bore 2		Bore 3		Bore 4		Bore 5		Bore 6		Bore 7		Bore 8		Bore 9		Bore 10	
(m)	method	resist	method	resist	method	resist	method	resist	method	resist	method	resist	method	resist	method	resist	method	resist	method	resist
0																				
0.5							PT		PT		PT		PT		PT					
1.0																				
1.5	DRILLED																			
2.0																				
2.5			PRIOR																	
3.0																				
3.5																				
4.0																				
4.5																				
5.0																				
5.5																				
6.0																				
Water																				

Other Observations

KP SQUARED ENGINEERING HEAVE CALCULATION

REF: 161104
DATE: June 18
SHEET: FC1

Heave Calculations

	HOLE 1		HOLE 2		HOLE 3	
Horizons	Depth	Ipt	Depth	Ipt	Depth	Ipt
1	0.40	0.015	0.40	0.015	0.35	0.015
2	0.70	0.035	0.65	0.035	0.80	0.035
3	0.80	0.020	0.80	0.020	1.00	0.020
4						
5						
6						
7						
8						
9						
10						
	Y_s =	19.7	Y_s =	18.9	Y_s =	25.9

Max. Ys= 25.9 mm Design Ym = 18.1 mm C\H
13.0 mm E\H

Tree effects (y / n) y Change in pF at base -0.26 (If '0' ,then Ys=Yst)

HOLE 1		HOLE 2		HOLE 3	
Y_{st} =	19.1	Y_{st} =	18.4	Y_{st} =	25.0

Max Yst= 25.0 mm Design Ymt = 17.5 mm C\H
13.0 mm E\H

Use Design Ymt = Yt + Ym = -0.6 + 18.2 = 17.7 (Based on AS 2870 2011)

Calculations are in accordance with the requirements of "AS2870 2011" as amended and the "Special provisions for the design of residential slabs and footings for South Australian conditions" issued by the I E Aust.

Notes / Comments :

KP SQUARED ENGINEERING HEAVE CALCULATION

REF: 161104
DATE: June 18
SHEET: FC2

Heave Calculations

	HOLE 4		HOLE 5		HOLE 6	
Horizons	Depth	Ipt	Depth	Ipt	Depth	Ipt
1	0.15	0.015	0.10	0.015	0.15	0.015
2	0.55	0.035	0.55	0.035	0.65	0.035
3	0.95	0.035	1.15	0.035	1.20	0.035
4	1.50	0.030	1.50	0.030	2.15	0.030
5	2.35	0.020	2.15	0.020	4.00	0.035
6	2.80	0.030	2.80	0.030		
7	4.00	0.035	4.00	0.035		
8						
9						
10						
	Y_s =	69.3	Y_s =	72.4	Y_s =	77.2

Max. Ys= 77.2 mm Design Ym = 54.0 mm C\H
38.6 mm E\H

Tree effects (y / n) y Change in pF at base 0.41 (If '0' ,then Ys=Yst)

HOLE 4		HOLE 5		HOLE 6	
Y_{st} =	94.7	Y_{st} =	98.3	Y_{st} =	105.2

Max Yst= 105.2 mm Design Ymt = 73.6 mm C\H
38.6 mm E\H

Use Design Ymt = Yt + Ym = 28.1 + 54.1 = 82.1 (Based on AS 2870 2011)

Calculations are in accordance with the requirements of "AS2870 2011" as amended and the "Special provisions for the design of residential slabs and footings for South Australian conditions" issued by the I E Aust.

Notes / Comments :

KP SQUARED ENGINEERING HEAVE CALCULATION

REF: 161104
DATE: June 18
SHEET: FC3

Heave Calculations

	HOLE 7		HOLE 8			
Horizons	Depth	Ipt	Depth	Ipt	Depth	Ipt
1	0.15	0.015	0.15	0.015		
2	0.65	0.035	0.65	0.035		
3	1.15	0.035	1.15	0.035		
4	2.25	0.030	2.10	0.030		
5	4.00	0.035	4.00	0.035		
6						
7						
8						
9						
10						
	Y_s =	76.7	Y_s =	77.1	Y_s =	0.0

Max. Ys= 77.1 mm Design Ym = 54.0 mm C\H
38.5 mm E\H

Tree effects (y / n) **y** Change in pF at base 0.41 (If '0' ,then Ys=Yst)

HOLE 7		HOLE 8		0	
Y_{st} =	104.6	Y_{st} =	105.1	Y_{st} =	0.0

Max Yst= 105.1 mm Design Ymt = 73.6 mm C\H
38.5 mm E\H

Use Design Ymt = Yt + Ym = 28.1 + 54 = 82.1 (Based on AS 2870 2011)

Calculations are in accordance with the requirements of "AS2870 2011" as amended and the "Special provisions for the design of residential slabs and footings for South Australian conditions" issued by the I E Aust.

Notes / Comments :

FOOTING COMPUTATIONS

Ref.: 161104
Date: JUN'18
Design: MH
PAGE: FC4

SITE : 541 ANZAC HIGHWAY, GLENELG EAST
(FOR E1 FOOTING)

DESIGN ASSUMPTIONS

(1) Building Construction : Double Storey Walls: Hebel Roof: Sheeted

(2) $D_{Allowable}$: L/400 < 30mm
(3) m = 1.5L/a

DESIGN RECTANGLE A

Length (L1)	10.3	m
Width (L2)	4.5	m
Beams Parallel to L1	3	
Beams Parallel to L2	5	
Area of Beams	0.17	
Assumed Beam Size	300 x 550	

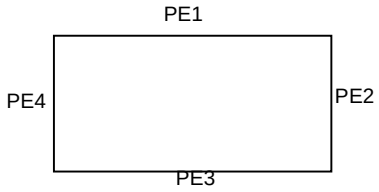

LOADING

Udl

100 Ground Slab		0	kPa
Live Load		1.5	kPa
Finishes, Partitions		1	kPa
Internal Footings		0.00	kPa
	Total	2.5	kPa

Edge Loading

PE1	External Wall:	Herbel	5.9 x 1.5 kPa	8.85	kN/m
	Roof:	Sheeted	2.3 x 0.4 kPa	0.92	kN/m
	Floor:	Timber	2.3 x 1.55 kPa	3.565	kN/m
	Footing Self Weight			0	kN/m
			Total	13.3	kN/m
PE2	External Wall:	Hebel	5.9 x 1.5 kPa	8.85	kN/m
	Roof	Sheeted	1.6 x 0.4 kPa	0.64	kN/m
	Floor	Timber	1.6 x 1.55 kPa	2.48	kN/m
	Footing Self Weight			0	kN/m
			Total	12.0	kN/m
PE3	External Wall:	Hebel	5.9 x 1.5 kPa	8.85	kN/m
	Roof	Sheeted	2.3 x 0.4 kPa	0.92	kN/m
	Floor	Timber	2.3 x 1.55 kPa	3.565	kN/m
	Footing Self Weight			0	kN/m
			Total	13.3	kN/m
PE4	External Wall:	Hebel	5.9 x 1.5 kPa	8.85	kN/m
	Roof	Sheeted	1.6 x 0.4 kPa	0.64	kN/m
	Floor	Timber	1.6 x 1.55 kPa	2.48	kN/m
	Footing Self Weight			0	kN/m
			Total	12.0	kN/m

Checked.....
Date...../...../.....

FOOTING COMPUTATIONS

Ref.: 161104
Date: JUN'18
Design: MH
PAGE: FC5

SITE : 541 ANZAC HIGHWAY, GLENELG EAST
(FOR E1 FOOTING)

DESIGN ASSUMPTIONS

(1) Building Construction : Double Storey Walls: Hebel Roof: Sheeted

(2) $D_{Allowable}$: L/600 < 20mm
(3) m = 1.5L/a

DESIGN RECTANGLE A

Length (L1)	37.5	m
Width (L2)	6.1	m
Beams Parallel to L1	3	
Beams Parallel to L2	18	
Area of Beams	0.17	
Assumed Beam Size	300 x 550	

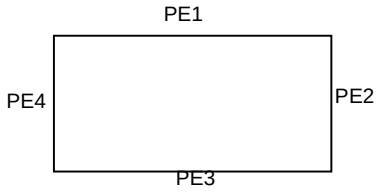

LOADING

Udl

100 Ground Slab		0	kPa
Live Load		1.5	kPa
Finishes, Partitions		1	kPa
Internal Footings		0.00	kPa
	Total	2.5	kPa

Edge Loading

PE1	External Wall:	Herbel	5.9 x 1.5 kPa	8.85	kN/m
	Roof:	Sheeted	3.1 x 0.4 kPa	1.24	kN/m
	Floor:	Timber	3.1 x 1.55 kPa	4.805	kN/m
	Footing Self Weight			0	kN/m
			Total	14.9	kN/m
PE2	External Wall:	Hebel	5.9 x 1.5 kPa	8.85	kN/m
	Roof	Sheeted	2.1 x 0.4 kPa	0.84	kN/m
	Floor	Timber	2.1 x 1.55 kPa	3.255	kN/m
	Footing Self Weight			0	kN/m
			Total	12.9	kN/m
PE3	External Wall:	Hebel	5.9 x 1.5 kPa	8.85	kN/m
	Roof	Sheeted	3.1 x 0.4 kPa	1.24	kN/m
	Floor	Timber	3.1 x 1.55 kPa	4.805	kN/m
	Footing Self Weight			0	kN/m
			Total	14.9	kN/m
PE4	External Wall:	Hebel	5.9 x 1.5 kPa	8.85	kN/m
	Roof	Sheeted	2.1 x 0.4 kPa	0.84	kN/m
	Floor	Timber	2.1 x 1.55 kPa	3.255	kN/m
	Footing Self Weight			0	kN/m
			Total	12.9	kN/m

Checked.....
Date...../...../.....

INPUT DATA

Footing Analysis by: SLOG

Site: 541 ANZAC HWY GLENELG EAST
Reference: 161104
Date: 17/05/2018

Structure geometry

Length of Structure L:	10.3	m
Breadth of Structure:	4.5	m
No. beams parallel to Long Span:	3	
No. beams parallel to Short Span:	5	
Deflection Ratio △/L:	400	
Maximum Allowable Deflection △:	30	mm
Depth Footing not Embedded:	0.2	m

Soil Properties

Soil Heave Ym:	82.1	mm
Depth of suction change Hs:	4	m
Mound stiffness k:	1853	kPa/m

Structure loads

Edge Load on West End:	12	kN/m
Edge Load on East End:	12	kN/m
Edge Load on North Side:	13.3	kN/m
Edge Load on South Side:	13.3	kN/m
North-South Centre Load:	0	kN/m
East-West Centre Load:	0	kN/m
Uniform distributed load:	2.5	kPa

Raft Footing Properties

Sub-Beam Width	300	mm
Top Concrete Cover:	50	mm
Bottom Concrete Cover:	50	mm
Slab Thickness:	100	mm
Area Slab Steel:	179	mm2/m
Steel Grade fsy:	500	MPa
Concrete Compressive Strength f'c:	20	MPa
Concrete Tensile Strength Hogging:	1.8	MPa
Concrete Tensile Strength Sagging:	2.7	MPa
Young's Modulus of Concrete:	15000	MPa
Requested Mu/Mcr Ratio Hogging:	1.5	
Requested Mu/Mcr Ratio Sagging:	1.2	

Additional Properties

Soil Edge Heave:	82.1	mm
Beam Side Friction:	25	kPa

OUTPUT - Raft Footing

Footing Analysis by: SLOG

Site: 541 ANZAC HWY
Reference: 161104
Date: 17/05/2018

Required Capacities per Beam

	Long Span		Short Span	
Centre Heave				
Ultimate Negative Moment:	-189.5	kNm	-118.0	kNm
Ultimate Positive Moment:	0.0	kNm	0.0	kNm
Max Shear:	52.7	kN	58.0	kN
Required Stiffness:	64.318	MNm^2	15.900	MNm^2
Edge Heave				
Ultimate Negative Moment:	-0.7	kNm	-5.3	kNm
Ultimate Positive Moment:	105.5	kNm	35.8	kNm
Max Shear:	42.9	kN	-28.3	kN
Required Stiffness:	35.744	MNm^2	4.499	MNm^2

RAFT REQUIREMENTS

Sub-beams:	300	**mm wide x**	750	**mm deep**
Slab:	100	**mm**	179	**mm^2/m**
Subbeam top bars:	430	**mm^2**		
Subbeam bottom bars:	319	**mm^2**		
Concrete:	20	**MPa**		

Actual Capacities per Beam

	Centre Heave		Edge Heave	
Sub-beam depth:	750	mm	750	mm
Minimum top bars	430	mm^2		
Minimum bottom bars			319	mm^2
Ultimate Moment Mu:	189.5	kNm	110.6	kNm
Cracking Moment Mcr:	81.6	kNm	91.5	kNm
Mu/M* =	1.25		1.31	
Mu/Mcr =	2.32		1.21	
Stiffness:	66.974	MNm^2	218.180	MNm^2

INPUT DATA

Footing Analysis by: SLOG

Site: 541 ANZAC HWY GLENELG EAST
Reference: 161104
Date: 20/06/2018

Structure geometry

Length of Structure L:	37.5	m
Breadth of Structure:	6.1	m
No. beams parallel to Long Span:	4	
No. beams parallel to Short Span:	19	
Deflection Ratio △/L:	400	
Maximum Allowable Deflection △:	30	mm
Depth Footing not Embedded:	0.2	m

Soil Properties

Soil Heave Ym:	82.1	mm
Depth of suction change Hs:	4	m
Mound stiffness k:	1884	kPa/m

Structure loads

Edge Load on West End:	12.9	kN/m
Edge Load on East End:	12.9	kN/m
Edge Load on North Side:	14.9	kN/m
Edge Load on South Side:	14.9	kN/m
North-South Centre Load:	0	kN/m
East-West Centre Load:	0	kN/m
Uniform distributed load:	2.5	kPa

Raft Footing Properties

Sub-Beam Width	400	mm
Top Concrete Cover:	50	mm
Bottom Concrete Cover:	50	mm
Slab Thickness:	100	mm
Area Slab Steel:	179	mm2/m
Steel Grade fsy:	500	MPa
Concrete Compressive Strength f'c:	20	MPa
Concrete Tensile Strength Hogging:	1.8	MPa
Concrete Tensile Strength Sagging:	2.7	MPa
Young's Modulus of Concrete:	15000	MPa
Requested Mu/Mcr Ratio Hogging:	1.5	
Requested Mu/Mcr Ratio Sagging:	1.2	

Additional Properties

Soil Edge Heave:	38.5	mm
Beam Side Friction:	25	kPa

OUTPUT - Raft Footing

Footing Analysis by: SLOG

Site: 541 ANZAC HWY
Reference: 161104
Date: 20/06/2018

Required Capacities per Beam

	Long Span		Short Span	
Centre Heave				
Ultimate Negative Moment:	-208.1	kNm	-180.5	kNm
Ultimate Positive Moment:	15.9	kNm	0.0	kNm
Max Shear:	52.7	kN	-68.4	kN
Required Stiffness:	204.185	MNm^2	33.944	MNm^2
Edge Heave				
Ultimate Negative Moment:	-0.1	kNm	-7.5	kNm
Ultimate Positive Moment:	10.0	kNm	0.9	kNm
Max Shear:	23.4	kN	22.9	kN
Required Stiffness:	1.525	MNm^2	1.974	MNm^2

RAFT REQUIREMENTS

Sub-beams:	400	**mm wide x**	850	**mm deep**
Slab:	100	**mm**	179	**mm^2/m**
Subbeam top bars:	353	**mm^2**		
Subbeam bottom bars:	475	**mm^2**		
Concrete:	20	**MPa**		

Actual Capacities per Beam

	Centre Heave		Edge Heave	
Sub-beam depth:	850	mm	850	mm
Minimum top bars	353	mm^2		
Minimum bottom bars			475	mm^2
Ultimate Moment Mu:	208.1	kNm	188.2	kNm
Cracking Moment Mcr:	136.0	kNm	155.7	kNm
Mu/M* =	1.25		14.84	
Mu/Mcr =	1.53		1.21	
Stiffness:	250.850	MNm^2	416.923	MNm^2

KPU SQUARED ENGINEERING

Date: 13/06/2018

Job Number: 161104

Page Number: SC1

FENCE FOOTING DESIGN.

DESIGN FOR WIND SPEED = 28 m/s.

$q_z = 0.47$ kPa.

→ PROVIDE 1N16 ROD AT EACH BRICK PIER.

CHECK FOOTING FOR OVERTURNING.

$C_{pn} = 1.2 \rightarrow p_n = 1.2 \times 0.47$ kPa $= 0.56$ kPa

Hat base $= 0.56 \times 2$ m $= 1.1$ kN/m.

$R_2 = \frac{1}{2} q_2 \, 0.32 D B$ → try 300 WIDE × 1200 DEEP PIERS @ BRICK PIER LOCATIONS.

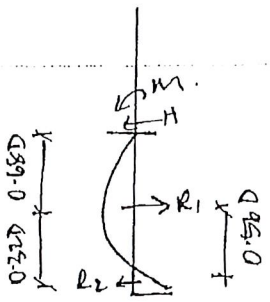

$R_2 = \frac{1}{2} \times 150 \times 0.32 \times 1.2 \times 0.3 = 8.64$ kN

$M_{res} = 0.56 R_2 D = 5.8$ kNm.

CHECK FOR $q_1 \leq 100$ kPa.

$H = R_1 - R_2$

$1 = \frac{2}{3} q_1 \times 0.68 \times 0.3 \times 1.2 - 8.64$

$q_1 = 59$ kPa → OK.

→ ADOPT 300 WIDE × 1200 DEEP PIERS.

DETAILS ON THE USE OF THE FOOTING CONSTRUCTION REPORT

GENERAL

This report is a Construction report which provides specific recommendations for the proposed building. It is essential that this report be read in conjunction with all the drawings, details and specifications. Changes to the design or construction cannot be made without further written advice from the Engineer.
The details outlined within this report contain advice designed to minimise distress to the building. It is an important document and should be kept in a safe place. This report must be supplied to subsequent owners so that they are aware of the consequences of making any changes to the building, site, garden and adjacent areas. Without this information, they may institute changes to site management that could jeopardize the long term serviceability of the building.
This Construction Report has been prepared at the request of the Owner. It is a condition of the use of this report that the owner accepts the basis on which the footing design has been prepared, refer below, and that the Owner ensures that the Engineer is advised of the time to attend each of the recommended site inspections.

The Owner must read the entire report carefully as it contains important information, relating not only to the construction of the footings, but also to the obligations, liabilities and requirements for site management.
If the Owner requires a different type of footing to that recommended, or stiffer footings to reduce movement, this office must be notified prior to the commencement of construction, and advice will be given accordingly.
If there are any aspects of the report that are not understood, please contact the Engineer.
The Engineer may (and the Owner hereby authorizes the Engineer to):
Issue instructions (including an instruction to cease construction) on behalf of the Owner to any person engaged in the construction of the building, or any part thereof, to ensure construction of the building in accordance with this Construction Report and any modification thereof. If any modification as aforesaid may be likely to result in additional construction costs exceeding $ 2000.00 the Engineer may issue an instruction to cease construction in order to obtain the approval of the Owner for such modification.
Make such modifications to the Construction Report as the Engineer may deem necessary during the course of construction.

The Owner shall be responsible for, and indemnify the Engineer against, all and any costs and charges and all claims and demands made for any additional costs incurred by reason of any act, requirement or instruction of the Engineer made or given pursuant to clause.
The Engineer shall not be liable for any defect in or damage to the building arising from footing inadequacy or movement of the building, including its footing, caused by or contributed to by any breach of the terms, conditions and recommendations committed, permitted or allowed by the Owner.
Where more than one person is named as the Owner, all these terms, conditions and recommendations shall bind all such persons jointly and each such person severally, and any instruction or information given to the Engineer by any one such person shall be deemed to be given by all other such persons.
For the purposes of these conditions any builder or supervisor (and any of their respective servants or agents) engaged in the construction of the building shall be deemed to be an agent of the Owner.

FOOTING PERFORMANCE

This report is based on the following information. The intention of the footing design is to prevent cracking exceeding the Category and damage degree as slight (Refer tables 1 & 2). In the event of leaking water or sewer pipes, or deviation from the site management requirements outlined in this report, the above Category of damage becomes inapplicable.
It must be understood that reactive clays move due to moisture changes. Relatively stable clays may move significantly if they are subjected to extreme moisture changes (for example too much or too little garden watering). Therefore, it is difficult and not economical to design footings for extreme conditions. The Owner must maintain reasonable moisture conditions at the site.
It is impossible to design a footing system that totally prevents movement, unless there is no financial limit. Some minor non-structural/ aesthetic cracking will occur in a large number of buildings. Limits of performance are outlined in Tables 1 and 2. Occasional Category 2 behaviour may occur, for most situations Category 0 and 1 should be the limit. Significant cracking in masonry with widths over 5mm (Category 3) generally do not jeopardize the structural integrity of the wall and only presents an aesthetic problem.

As it is impossible to design an immovable footing system, it is very difficult to provide remedial measures that will prevent further movements if distress does occur. As such, extreme remedial measures should not be undertaken for minor problems.

Footings are designed to reduce the risk of foundation (i.e. soil or rock) conditions causing distress to the building or structure. The footing design does not completely eliminate all cracking or other distress.
The definition of the failure of the footing is a crack width of 5mm, or some other distress as defined in the Australian Standard 2870 "Residential Slabs and Footings" (AS 2870).
The definition of distress is any movement, damage, cracking, collapse or other condition which reduces the safety, aesthetics or serviceability of the building or structure.
The design and construction of footings is to achieve a small but finite probability of failure as in most cases it is not economic to construct footings which eliminate the possibility of cracking. The industry accepted probability of failure is 5%. What this means is that there is a probability that 1 in 20 buildings will experience a crack of 5mm width during their design life. This risk is a community and industry based standard as defined by AS 2870. Should the owner want a lower risk of distress, this can be achieved but at increased expense. This must be specifically requested. The risk of distress and failure is effected by a number environment factors. The risk is based on normal site and environment conditions. Abnormal conditions such as, leaking water or sewer pipes or deviation from the site management contained in this report, will increase the risk of damage to the building, and the above category of damage becomes inapplicable. Many of these factors are directly under the control of the Owner.
The specified footings are the most economical which will provide the desired performance and which comply with all relevant building codes and industry practice.

ADDITIONS TO EXISTING BUILDINGS

Additions made to an existing building have additional considerations which must be considered. The existing building footings and the footings of the addition are independant structures. Even though some connection may be made between the two footing systems, the footings will move independently/differentially. As such, cracking may occur at the junction of the two and control joints will open and / or close. The addition will not normally stabilise the existing building, whether or not the addition is built.
On reactive clay sites, the planting of trees should be avoided for protection against the possibility of damage.
The attachment of floor surfacing to concrete slabs that have not fully dried can cause problems via moisture reactions with glues or concrete shrinkage. Drying times vary, and up to 6 months may be required. Concrete shrinks as it dries and this results in some cracking, often around 1mm in width. This has little effect on structural performance of the slab but could effect some brittle floor coverings if installed too soon.

TABLE 1

CLASSIFICATION OF DAMAGE WALLS		
DESCRIPTION OF TYPICAL DAMAGE AND REQUIRED REPAIR	**APPROXIMATE CRACK WIDTH LIMIT**	**CATEGORY AND DEGREE OF DAMAGE**
Hairline cracks.	Less than 0.1mm	0 - Negligible
Fine cracks which do not need repair.	Less than 1.0mm	1 - Very slight
Cracks noticeable but easily filled. Doors and windows may stick slightly.	Less than 5.0mm	2 - Slight
Cracks can be repaired and possible a small amount of wall will need to be replaced. Doors and windows stick. Service pipes can fracture. Weather-tightness often impaired.	5mm to 15mm (or a number of cracks 3mm to 5mm in one group)	3 - Moderate
Extensive repair work involving breaking-out and replacing sections of walls, especially over doors and window. Window and door frames distort. Walls lean or bulge noticeably with some loss of bearing in beams. Service pipes disrupted.	15mm to 25mm but also depends on number of cracks	4 - Severe

TABLE 2

CLASSIFICATION OF DAMAGE - CONCRETE FLOORS			
DESCRIPTION OF TYPICAL DAMAGE	APPROXIMATE CRACK WIDTH LIMIT IN FLOOR	CHANGE IN OFFSET FROM A 3M STRAIGHT EDGE CENTERED OVER DEFECT	CATEGORY AND DEGREE OF DAMAGE
Hairline cracks, insignificant movement of slabs from level.	Less than 0.3mm	Less than 8mm	0 - Negligible
Fine but noticeable cracks. Slab reasonably level.	Less than 1.0mm	Less than 10mm	1 - Very slight
Distinct cracks. Slabs noticeably curved or changed in level.	Less than 2.0mm	Less than 15mm	2 - Slight
Wide cracks. Obvious curvature or change in level.	2mm to 4mm	15mm to 25mm	3 - Moderate
Gaps in slab. Disturbing curvature or change in level.	4mm to 10mm	Less than 25mm	4 - Severe

NOTES TO TABLES 1 AND 2:

Crack width is only one factor in assessing category of damage and should not be used on its own as a direct measure of that damage.
In assessing the degree of damage, account shall be taken of the location in the building or structure where it occurs, and also of the function of the building or structure.
Local deviation of slope, from the horizontal or vertical, of more than 1/100 will normally be clearly visible, Overall-deviations in excess of 1/150 are undesirable.
Account should be taken of the past history of damage in order to assess whether it is stable or likely to increase.
The straight edge is centered over the defect, usually a crack, and supported at its ends by equal height spacers. The change in offset is then measured relative to the straight edge.

SOIL BORELOGS

The soil profiles (indicated by the test bores) is what forms the basis of the footing recommendations. The soil profile is particular to the test location and the soil samples obtained may not reveal all the soil variations on the site. Soil profiles may vary substantially between each core.
Assessment of subsurface soils apart from the determination of the 'soil heave' value, is excluded.
It is important that any variations or discrepancies in soil type, colour, or horizon depth, as compared to the test bores shall be referred to the Engineer immediately. Sole reliance cannot be placed on the surface soil borelogs as a means of being an absolute representation of all sub-surface features existing on the site. The density and difficulty of excavating cannot be estimated by interpretation of the surface soil borelog.
The footings have been selected on the basis of the recognised characteristics of the soil profile. These characteristics have been visually assessed and related to know performance of the soils under optimum conditions of site development and use. It is assumed that aspects of site drainage, paving and landscaping have been, or will be, implemented. Where any or all of these aspects do not form part of the building contract, it is a mandatory requirement that they be carried out within a period of 4 months from date of completion of the building provided always that adequate temporary drainage is installed.

SITE INSPECTIONS

GENERAL

Inspections exclude Architectural details, the checking of levels, layout dimensions, squareness and relationship to site boundaries.

The inspections listed below are strongly recommended. It is stressed that incorrect construction, detected at a later stage, may result in increased costs for remedial work.

Ensure that construction of the building is not allowed to proceed beyond any stage at which an inspection is required, unless the Engineer has approved the work at that stage.

The owner shall ensure that any instruction given by the Engineer is undertaken.

STAGES FOR INSPECTIONS

Once primary earthworks are complete, where the depth of excavation and/or filling exceeds 600mm.The inspection shall be limited to a visual assessment of the earthworks, and any approval shall be conditional upon the Owner completing the final earthworks to the correct levels and slopes at a later stage. Where the Engineer considers that additional testing or investigation is required as a result of the earthworks, work shall not proceed until the additional services have been completed. Any such additional testing, investigation and reporting shall incur additional fees.

After completion of excavation for footings and prior to the placement of any vapour barrier (if required) or reinforcement. Where footing construction is staged, an inspection must be carried out at each stage.

After preparation of the reinforcement prior to pouring any concrete. After completion of excavation for main sewers to ensure that the trenches, as constructed, do not affect the footing as designed. Checking sewers for compliance with the requirements of statutory authorities is excluded. After completion of brickwork or similar to ensure that the articulation joints have been placed at the specified locations. Checking construction details which are not visible is excluded and no responsibility is taken for any problem arising from such.

Upon completion of the installation of paving, stormwater drains, pipes and structures. The checking of sections which are not visible is excluded and no responsibility is taken for any problem arising from such sections. Maintenance of ground slopes to ensure continued proper drainage will be required subsequent to the inspection, and shall remain the Owner's responsibility.

FOOTINGS/SLABS SPECIFICATION

GENERAL NOTES

The specific type of construction is nominated on the cover sheet of the footing construction report. The standard details shown are typical only, and specific items (eg footing dimensions, number of bars) are to be noted as in the Construction Report.
Where specific requirements or details provided in the Construction Report, or on the drawings, conflict with these general specifications, the report and/or drawings shall take precedence.

CONCRETE

Construction methods, materials, tolerances and finishes must comply with AS 3600 SAA Concrete Structures Code and all other relevant Australian Standards, the Building Code of Australia and any specific requirements of the Local Council.
Concrete grade shall be as follows:

- Slabs on ground, footings protected by vapour barrier and residential strip / pad footings shall be grade N20 (i.e. 20 MPa).
- Suspended slabs, beams and columns and non- residential footings unprotected by vapour barrier shall be grade N25 (i.e. 25 MPa).
- Members in exposed exterior environments shall be grade N32 (i.e. 32 MPa).
- Maximum aggregate 20mm.
- Slump limit 80mm.

For sites located within 1 km of the sea or corrosive water (including areas west of the corrosion line marked on the wind speed map) where surfaces such as verandahs, balconies, and carports are exposed, the surface shall be protected with a suitable approved topping, sealer, tiles (etc) or the concrete grade must be not less than N40 (i.e. 40 MPa).
Concrete shall be supplied in accordance with AS 1379 SAA Ready-mixed Concrete Code. Site mixed concrete shall not be used.
Sulphate-resisting cement (Type D - AS 1315) shall be used when specified, or when it is known by the Owner, Builder, Local Council, or concrete supplier that this cement should be used at the site.
Chemical admixtures may be used, provided the concrete supplier accepts responsibility for their use.

PLACEMENT OF CONCRETE

Concrete shall be placed as close as possible to its final position, and the pour must proceed in one continuous operation, to ensure that no more than 45 minutes elapse before placing fresh concrete against previously placed, in order to eliminate 'cold joints'.
All concrete must be mechanically vibrated to ensure that it is properly compacted, and all excess air voids have been removed. Care must be taken to make sure that the concrete does not become segregated by local over-vibration.
Construction joints will not be permitted in the footings without written approval from the Engineer, except where noted on the detail drawings. Where a raft footing system has been specified it is required that the footing be poured at the same time (i.e. integrally) with the floor slab. Should it be necessary to pour the footing beams separately to the floor slab, the beams shall be poured to a level exposing the top reinforcement by approximately 50mm. The spacing of ligatures must be reduced to a maximum of 300 mm centers should this be the case. Where construction joints are used, the concrete surface shall be formed up vertically and the hardened surface of the first pour shall be thoroughly cleaned of all loose aggregate dirt, etc. The hardened concrete shall be thoroughly wetted and a neat slurry shall be applied to its surfaces in a thin layer cement immediately prior to pouring fresh concrete.
The construction of a slab shall achieve the following dimensional tolerances:
The cover to the reinforcement from the surface in contact with the ground shall be within +40mm and –20mm of the specified cover, except that the bottom cover to beams may be increased where the beams are deeper than specified.
The cover to the reinforcement from the internal surface shall be within +20mm and -10mm of the specified cover.
The surface shall be generally within +10mm of level.
A steel trowelled finish with a tolerance of +/-5mm from a 3m straight edge shall be used In the absence of any specification.

The surface finishes shall be suitable for the specified floor coverings to be provided without further treatment.
The thickness of the slab and the width and depth of the beam shall not be less than the specified dimension.

CURING

Curing of the slab shall commence as soon as possible after the pour and must be within 4 hours of the concrete pour.
Curing may be achieved by covering the slab with polyethene sheeting for a minimum of 7 days, or by spraying with an approved curing compound, subject to compatability with the proposed surface finishes.

HOT WEATHER CONCRETING

When the forecast temperature exceeds 36 degrees Celsius concrete must not be poured.
When the forecast temperature is between 32 and 36 degrees Celsius concrete can only be poured if the following Conditions are adhered to:
If the concrete is completed prior to the air temperature reaching 32 degrees Celsius.
When the site is protected from hot drying winds.
When the slab surface is covered with plastic sheeting, or hessian (kept wet), within 2 hours of finishing.

REINFORCEMENT

Reinforcement designation:
R - Plain round structural bar to AS1302.
Y - Hot rolled deformed bar to AS1302.
F - Hard drawn wire fabric to AS1304.
W - Hard drawn wire bar to AS1303.
RF - Ribbed Fabric to AS1302.
N – Hot rolled deformed bar to AS4671
SL – Square ribbed fabric to AS4671
RL – Rectangular ribbed fabric to AS4671

Reinforcement is to be supported on concrete blocks or bar chairs, or suspended from formwork.
Reinforcement shall be placed evenly, straight and adequately tied (by wire) to prevent any movement and to hold it in the correct position during the pouring of concrete.
Fabric shall be supported on concrete blocks or bar chairs, placed under the intersection of cross wires at 800mm x 800mm (maximum centres).

At external corners, and intersections of external and internal footings, the reinforcement shall be lapped with a bent bar, or separate corner bars, as indicated on the details.

Minimum rod lap lengths :

Bar Size	Lap Length (mm)
N12	500
N16	750
N20	1000
N24	1450
N28	1800
N32	2150
N36	2600

Fabric shall be lapped one full square plus 25mm at all joins.
Where brittle floor coverings are to be used (such as tiled areas), additional measures are required to control the effect of shrinkage cracking.
Additional measures to control the effect of shrinkage cracking include the following:
A flexible grout bed shall be provided, 'Resaflex' or similar.
The placement of floor covering shall be delayed. Note: A minimum of 6 months drying of the concrete is usually required before the placement of brittle floor covering.
Installation of control joints within the brittle floor coverings where the area exceeds 20m^2.
2 layers of SL72T (or 1 layer of SL92T)

COVER
Clear cover to concrete reinforcement, (including fitments and wire ties) shall be:

- Slab on fill - 30mm bottom and sides, 20mm top
- Footings protected by vapour barrier - 40mm bottom and sides, 20mm top
- Residential footings unprotected by vapour barrier - 40mm top, 50mm bottom and sides
- Non-residential footings unprotected by vapour barrier - 50mm top, bottom and sides

If a footing beam is 'over-excavated', keep the reinforcing 'cage' towards the top portion of the footing beam.

VAPOUR BARRIER/PLASTIC

The vapour barrier shall be branded continuously "AS2870 Concrete Underlay, 0.2mm High Impact resistance".
The vapour barrier shall be provided throughout the underside of all habitable areas and shall be continuous under all footing beams and slabs as shown on the typical detail sheets.
All joints shall be lapped a minimum of 300mm and sealed with a 50mm wide strip of pressure-sensitive waterproof tape. All service penetrations shall be securely flashed and taped. Perforation of the vapour barrier shall be sealed before placing concrete.
Where the depth of the footing trench is greater 800mm, the vapour barrier shall extend 800mm down the sides only.
Where the depth of the footing trench is greater than 1000mm, provide two layers of vapour barrier to the full depth each side.
Where strip footings are continuous beyond the slab (eg carports, footings), the sides and base of the strip footings shall be lined with a vapour barrier for a distance of not less than 800mm beyond the edge of the slab, unless the depth exceeds 800 mm.
The vapour barrier is not mandatory under exposed slabs (carports, verandahs, etc) where they are poured separately to the footing beams. Where future enclosure of carport etc, is proposed, it is required to provide the vapour barrier.

LEVEL PINS

Level pins which puncture the vapour barrier can be used in the footing trenches but not in the area of the floor slab.
Level pins shall have 30mm cover to all reinforcing.
Pins used to support service pipes must be driven 30mm(min) below the finished floor level, and be fully taped to the pipe.

SERVICE PENETRATIONS AND FLEXIBLE CONNECTIONS

Service penetrations are permitted through footings subject to the following:
50mm (min) to be provided between the pipe and reinforcement.
Pipes shall be located in the middle third of the footing beam. Penetrations outside this area may require additional concrete depth or reinforcement. Where reinforcement is cut to suit the location of pipes, additional reinforcement shall be provided, correctly placed and lapped with the main reinforcement. Where the pipe is close to the bottom bars and adequate cover is not available, additional excavation must occur below the pipe and the bottom rods placed and lapped so as to provide the correct cover.
Pipes embedded within the floor slab shall have 100mm of cover over the pipe. Where this cannot be achieved the minimum cover may be reduced to 40mm provided that the reinforcing fabric is continuous over the pipe, and the sand/rubble base is excavated to provide 100mm of concrete all around the remainder of the pipe.
Holes provided for service penetrations through the floor slab shall not exceed 600mm square.

EDGE REBATES

Edge rebates shall be provided to all masonry cavity or veneer walls.
The minimum rebate depth shall be 25mm. This may be increased to suit masonry coursing. The maximum rebate depth is 100mm.
Rebates are not required in the following construction:
-single leaf masonry walls
-timber frame clad walls
-walls on strip footings.

HEATING CABLES AND PIPES

Electric heating cables may be embedded in the slab without any increase in thickness.
Hydronic heating pipes may be embedded in the slab, if the slab thickness is increased by 25mm. An additional layer of fabric (SL42 or larger) is be provided under the pipes. The main fabric shall be placed with 20mm cover to the top face.

SLABS ON FILL

Fill placed under a slab, (existing on site or placed during siteworks) except where the slab has been designed as suspended, shall consist of controlled fill or rolled fill.
Controlled fill is material that has been placed and compacted within a defined moisture range, in layers by Compaction equipment to defined density requirement. Except as provided below, controlled fill shall be placed in accordance with engineering principles. One test for each 100m^2 of building area (or 3 tests minimum per visit - whichever is greater) is required for every 600mm layer.
Sand fill, well compacted in not more than 300mm layers by a vibrating plate or vibrating roller, shall be deemed to comply with this requirement. Sand fill shall achieve a blow count of at least greater than 7 per 300mm using a penetrometer to AS 1289.F3.3.
Non-sand fill well compacted in not more than 150mm layers by a mechanical roller, shall be deemed to comply with this requirement. Non-sand fill shall be compacted to 95% maximum dry density when tested in accordance with AS 1289 E.1.1. (standard).
The fill shall be tested to ensure that it has been compacted to the specified density, OR
The slab shall be increased in thickness to 125mm and reinforced with an additional layer of fabric placed with 30mm cover to the vapour barrier.

TERMITE PROTECTION

Termite protection systems shall be in accordance with AS3660.1.

EARTHWORKS

Unless otherwise specified, selected approved site materials, excluding topsoil or organic-bearing soil, may be used for compacted filling. Where site materials are unsuitable due to their nature or moisture content, quarry rubble or other approved filling material may be used. The specified standard of compaction shall be provided to an area extending not less than 1m beyond the perimeter of the building, and shall also be provided beneath any filled pavements.
Care must be taken when using vibrating and/or impact rollers if there are buildings close to the area being compacted.
Where the surface slope of an area which is to receive filling is steeper than 1 (vertical) in 8 (horizontal), a series of level benches shall be excavated along the contour over the whole of the area which will receive filling. This will stabilise the fill against downhill slip.
The footings specified in the construction report have been proportioned assuming that the contractor will achieve the specified compaction, no footing beam shall be founded in the filling unless the Engineer has checked its compaction standard and given his written acceptance of its compliance with the specifications.
If shallow filling is existing or placed without the use of appropriate compaction equipment, the filling will be assumed to be incapable of supporting any building load. Accordingly any concrete slab over such filling will have increased thickness and reinforcement while trenched/bored piers founded into firm natural ground may also be specified for the footings (including waffle type). The Engineer may waive this requirement if on inspection and/or checking of the filling shows it will be able to support the design loads. Settlement of uncompacted fill can lead to damage to buildings, services, pavements, etc.

EXCAVATOR

It is imperative that the owner provide sufficient supervision of the cut and fill operation in order to ensure that satisfactory completion of the siteworks and drainage scheme proposal are adhered to.
Vegetation and roots must be scraped off and removed from the building area at the commencement of cutting and filling. Where trees and large shrubs are removed, the surrounding soils must be watered to raise the moisture content to that of the other soils under the proposed building.
Where bank heights do not exceed 2.0m and the natural slope of the site does not exceed 1 in 5, the batter slopes recommended in table A3 may be used.

DESIRABLE BATTER SLOPES

MATERIAL	SURFACE SLOPE (MAX)
Heavy clay	1 vertical to 1.0 horizontal
Sands and cohensionless soils	1 vertical to 2.0 horizontal
Sandy silts and silty clays	1 vertical to 1.5 horizontal
Weathered rock in good condition	1 vertical to 0.5 horizontal
Sound rock	Nearly vertical

The extent of the cut and fill outside the building line shall not be exceeded with respect to the following requirements.Generally cut or fill within the property (ie not on boundary) should not exceed 900mm unless a suitable retaining wall is specified.
Cut or fill on the boundary shall not exceed 600mm, unless a suitable retaining wall is specified and shall not undermine any structure that exists on an adjacent property.
Filling used under a slab, (whether existing on site or placed during site works) except where the slab has been designed as suspended, shall consist of controlled fill or rolled fill.
Controlled fill is material that has been placed and compacted, within a defined moisture range, in layers by compaction equipment to a defined density requirement. Except as provided below, controlled fill shall be placed in accordance with engineering principles. One test for each 100m^2 of building area (or 3 tests minimum per visit - whichever is greater) is required for every 600mm layer.
Sand fill, well compacted in not more than 300mm layers by a vibrating plate or vibrating roller, shall be

deemed to comply with this requirement. Sand fill shall achieve a blow count of at least greater than per 300mm using a penetrometer to AS 1289.F3.3.
Non-sand fill well compacted in not more than 150mm layers by a mechanical roller, shall be deemed to

comply with this requirement. Non-sand fill shall be compacted to 95% maximum dry density when tested in accordance with AS 1289 E.1.1.(standard).
Rolled fill consists of material compacted in layers of repeated rolling by an excavator. Rolled fill shall not exceed 300mm compacted in layers not more than 150mm.
Embankments shall be protected from damage arising from surface erosion or ground water flow.
Slopes and grades of the cut bench or platform shown on the drainage plan are to be strictly adhered to, to allow for the site to be drained. In particular, a temporary toe may need to be cut in the ground at the base of cut banks to provide a drain. This drain should fall sufficiently to the low side so that water does not pond. On sites where erosion may be a critical problem provision of trench drains above the cut bank may be required to prevent erosion during the construction phase.
If a retaining wall has been specified, the cut or fill must not exceed the design height/requirements of the wall.

SITE PREPARATION

After completion of primary earthworks the site must be prepared for footing construction. Ideally, for raft construction, or strip footings where the soil surface under the floors in sealed, soils beneath the building area should be kept in as moist a condition as possible. For strip footings where the soil surface under the floors is not sealed, the building area should be kept as dry as possible.
For concrete floors provide a working surface of a minimum compacted thickness of 100mm (50mm for waffle rafts) of quarry rubble or other approved material. The selected material must be free of any sharp aggregate which could damage the vapour barrier. If sharp aggregate is evident on the surface a blinding layer of sand is recommended.
On class H or E sites pre-wetting of soil under slabs is most advantageous, especially if construction occurs in summer or autumn. In some cases pre-wetting of the site will be mandatory, but in all cases (except as noted in 3.1) it is a desirable procedure aimed at reducing the future heave of reactive clays. Similarly, pre-wetting of the site is mandatory where a new structure is proposed to be constructed over a site which had previously been occupied by a building with suspended ground floors (eg timber floors, concrete slabs on brick build up, etc). Pre-wetting can best be achieved be watering the site before under-floor fill is placed, using garden sprinklers for a minimum of 2 hours daily for 10 to 14 days immediately prior to commencement of construction. The amount of pre- wetting will vary considerably depending on seasonal and soil conditions, and it may be possible to eliminate watering if construction commences after prolonged rain, or during late winter or spring. Care must be taken to ensure that the soil does not become too saturated, otherwise siteworks may become difficult. After watering, the under-floor filling must be placed within a period of not more than 3 days.

TERMITE PROTECTION

Termite Protection System shall be provided in accordance with AS3660.1.
The system provided can only minimise the likelihood of termite infestation and it is stressed that termites can bridge or breach barrier systems.
Regular inspections in accordance with the code must be carried out by the owner.

SITE DRAINAGE

Due to differential moisture variations (ie wetting or drying) being the main cause of movement in clay soils, the provision of effective drainage is of great importance as it reduces the possibility of footings having to cope with extreme soil movements. The following outlines common causes of moisture variations.

WETTING UP

Leaking sewer, water or stormwater pipes.
Downpipes discharging too close to the building.
Sloping sites and inadequate drainage causing water to pond or collect close to the building.
Seepage on sloping sites caused by water travelling on the topsoil-clay, or soil-rock, interface. Cut-off drains are required in this situation.
Garden or lawn watering immediately adjacent to the footings. As a general rule this is not acceptable and

must not be done without the explicit approval of the Engineer.
Over-watering of gardens and lawns.
Inadequate soakage trenches.
Flooding during, and after, building construction.

DRYING OUT

The non-provision of paving, particularly on the north and west sides of the building, coupled with the non-establishment of a garden.
A change from an established garden situation to a native garden coupled with a substantially reduced level of watering.
The most common cause of drying out is that caused by trees being planted too close to the footings. Trees and large shrubs require substantial amount of water, and if the soil near the tree dries out, the roots will extend in search of soil moisture. Clays will shrink as they dry, and they may cause the building to settle.
Removal of large trees creates the opposite problem. As soil moisture is gradually restored, clays swell and may lift footings.
Many factors determine the extent of clay-drying by trees and the more important are the soil type, the size and number of trees and their species. Trees obtain moisture from the soil through roots which spread sideways and the drying zone is influenced by the extent of these roots. For single trees, the drying zone is usually one-half to twice the tree height, but the zone may be larger for groups or rows of trees. Although it is known that the species can influence the extent and severity of the drying zone, little definite information is available. Some Australian trees are particularly efficient in extracting water from very dry soils and can be more dangerous than non-Australian species. The effect of tree drying on the amount of movement is also related to the reactivity of the clay. To minimise the risk of damage, trees (especially groups of trees) shall not be planted near the building on a reactive clay site, and the following limits shall comply:
d = 1.5 h for class E sites
d = 1.0 h for class H sites
d = 0.75 h for class M sites
d is the distance of the tree from the building, and h is the mature height of the tree. These values shall be increased by 50% if the trees are in a dense group. These suggested limits mean that on the average suburban block, trees that grow higher than 8 to 9m are often impractical unless the owner accepts the risk of some damage to the building.
Due to the above factors the following work must be carried out, to minimise the detrimental effects of moisture variations.
Establish lawns and gardens around the building as soon as possible, and certainly within a maximum of 4 months from completion of the building.
Ensure all roof stormwater is discharged to the street where possible or alternatively discharged on the low side of the site not less than 6m from the building, but not so as to concentrate a flow of water onto neighbouring property. A contour and drainage plan will be provided if requested.
Large garden beds should not be located near the building. This will avoid the possibility of introducing too much moisture to the foundation soil by overwatering. The area near the building should be planned for paths or covered with gravel and plastic sheeting. Gardens and lawns should be watered adequately but not excessively. Uniform, consistent watering can be important to prevent damage to the foundation during dry spells such as droughts or dry summers.
After footings have been completed the site surface adjacent to the footings shall be graded by cutting and/or filling to provide a fall away from the building for a distance of not less than 1.0m. Any channel formed must be graded to discharge all run-off away from the building area. Generally any cut area shall be drained via a surface drain at the base of the cut embankment discharging to the low side of the site. On steep or large sites where significant catchment area is present uphill from the building, a surface drain must also be constructed across the top of the embankment. Water must not pond adjacent to footings. If ponding occurs this water must be pumped out immediately and the above grading and drainage implemented at once.
Due to constraints of site and building levels, the cover to underground pipes may be less than the manufacturer's specification. This is necessary to prevent very significant cost increases in site works which would otherwise be required. Some damage (which shall be repaired immediately) may occur to pipes if trenching for other services is undertaken, or if vehicles travel over garden areas.
Modifications to site levels can be made if the owner does not accept these conditions.
Where site drainage designs are not included with this report, they shall be prepared by others experienced in site drainage, and shall comply with the details and requirements of this report.

SUB-SURFACE DRAINAGE

Where specified in the recommendations or shown on the site drainage plan, sub- surface drainage shall be installed in accordance with any details provided. Note: potential seepage or sub-surface drainage problems cannot always be recognised from the results of the site investigation. All of the potential problems with respect to sub-surface water flow or seepage may not be evident at the time of the investigation, or even at the time of construction, however, it may become evident after the building has been occupied for the first winter.

PAVING REQUIREMENTS

Pavements shall be not less than 900mm in width (and preferably 1200m in width for class E sites).
Concrete pavements shall comply with table A4. (Refer also 5.4)

CONCRETE PAVEMENTS

		FOOT TRAFFIC ONLY		LIGHT VEHICLE TRAFFIC	
SOIL CLASSIFICATION	MINIMUM* CROSS FALL	THICKNESS (mm)	REINFORCEMENT	THICKNESS (mm)	REINFORCEMENT
A or S	1 in 30	75	SL52 [2m]	100	SL62 [3m]
M	1 in 20	75	SL52 [2m]	100	SL62 [3m]
H	1 in 20	75	SL62 [2m]	110	SL72 [4m]
E	1 in 20	100	SL62 [3m]	120	SL72 [4m]

The paving and the ground in the immediate vicinity of the building shall be graded to slope 50mm away from the building area, a distance of 1 metre from the house.
*The minimum cross fall may be dictated by the maximum allowable stated in AS 1428 Design for Access & Mobility.
[ ] Indicates maximum distance between control joints (noting that length of adjacent sides should be in the ratio of 1 to 1.3maximum)
Control joints shall be provided in accordance with the details attached.
Alternative pavements may be provided, eg brick or block pavers, hotmix, etc. Construction must be in accordance with the manufacturer's or supplier's specifications, with minimum cross falls as noted above.
Where the class of soil is H or E it is recommended that paving be constructed at the end of winter, when the site soils are wet, so that crossfalls constructed in the paving will not reduce. It is important, however, if the house is occupied during a winter period and no paving provided, that the soil surface around the perimeter of the house is maintained in a well drained state until such time as paving is installed.
If, on these soils, it is necessary to construct paving at other times of the year, eg the end of summer, the crossfall provided should be not less than twice that is indicated in the table above.
Pavements shall have a minimum set down below the rebate of 75mm.
Paving shall be constructed on a firm clean base. Ensure that all building debris is removed from the perimeter of the building. Provide a compacted quarry rubble base if necessary to elevate paving and achieve the necessary crossfall.
The paving shall not be constructed above any damp-proof course or built-in damp- proof membrane, unless other adequate damp-proofing measures are taken.
On reactive soil sites it may be found that paving separates horizontally from the perimeter of the building. It is important that any gaps between the building and paving be immediately sealed with a flexible mastic sealant.

BUILDING CONSTRUCTION AND ARTICULATION

It should be realised that there are many factors which affect the performance of the building. Visible cracking can be caused by shrinkage and warping of timbers, crazing of plaster, contraction and expansion of masonry and shrinkage of concrete, as well as the most commonly attributed cause via footing distortion. Generally minor cracking is of no significance and will not detract from the performance or durability of the building. It is uneconomical if not impossible to eliminate all such imperfections.
It is generally recommended that masonry walls be articulated at all or some openings. Articulation involves the incorporation of movement joints (control joints). The provision of all control joints at locations specified in the report is mandatory. Where no control joints are specified for footing movement requirements, control joints must be provided in walls longer than 12m.
Where new masonry abuts existing masonry, full height mastic filled control joints shall be used.

Because it is very difficult to prevent tilting of an extension relative to the existing building, the extension must be constructed so as to permit relative movement between the new and the existing building. This provision for relative movement applies to all work including roofs, floors, tiling, wall and ceiling finishes, etc.

SERVICES

Service trenches must be positioned so that the distance between the trench and the edge of the footing is not less than the depth of the trench below the base of the footing. If this cannot be achieved
the footings must be piered as indicated on the detail sheets.
Service penetrations are permitted through footings subject to the requirements in the Construction Report.
All service trenches both inside and outside the perimeter of the building must be carefully backfilled with approved material, and compacted.
The trenches should be sloped away from the building, and should be backfilled with clay in the top 300mm within 1.5m of the building, and where pipes pass under the footings, the trench should be backfilled with clay or concrete to prevent the ingress of water beneath the footing.
On class H or E sites special care must be taken to ensure that flexible service connections are used so as to allow for differential soil movement. An expansion coupling must be provided immediately outside the building, where the sewer connection penetrate the footing beam and at the junction of the branch to the main sewer pipe.
On class H, E or P (filled sites) sites, a flexible junction must be provided where downpipes connect into the underground stormwater drainage pipes. A sleeved fitting is adequate, but this should be sealed with silicone on class H or E sites.
Where pipes pass through a footing beam they must be lagged (ie wrapped) in accordance with the following:

Class S, M	-	Provide 20mm thick lagging (not necessarily closed cell)
Class H, P	-	Provide 20mm thick closed cell polyethylene lagging.
Class E	-	Provide 40mm thick closed cell polyethylene lagging.

CONSTRUCTION NOTES

GENERAL

These notes must be read together with the architectural drawings, the specifications and the Footing Construction Report.
All dimensions and levels shall be confirmed with the architectural drawings and/or checked on site.
Engineering drawings must not be scaled.
The builder and/or agent shall be responsible for maintaining the stability of all structures and any elements until their completion and shall ensure that no part of structures or any elements are overstressed by excessive loading.

CONCRETE

Concrete construction to comply with AS 3600.
Concrete grade shall be as follows:

- Grade N20 (ie 20 MPa) to slab on ground, footings protected by vapour barrier and residential strip / pad footings.
- Grade N25 to suspended slabs, beams, columns and non- residential footings unprotected by vapour barrier.
- Grade N32 to members exposed to exterior environments.
- Maximum aggregate 20mm.
- Slump limit 80mm.

For sites located within 1 km of the sea or corrosive water (including areas west of the corrosion line marked on The wind speed map), exposed surfaces such as verandahs, balconies and carports, shall be protected with a suitable
Topping, sealer, tiles, or the concrete grade must be a minimum of N40.
Construction joints to be thoroughly scabbled of all poorly compacted material. Vertical joints to be poured against shuttering.
All concrete is to be properly cured by keeping all exposed surfaces in a moist, damp condition for at least the first 7 days after placing or by spraying with an approved curing compound, (depending on compatibility with proposed surface finishes).
Minimum stripping times:

- Slab-soffit 14 days, props 21 days
- Beams-sides 3 days, soffit 21 days
- Columns and Walls - (unloaded) 3 days

Reinforcement designations are as follows:

- **R - Plain round structural bar to AS1302**
  N – Hot rolled deformed bar to AS4671
- **Y - Hot rolled deformed bar to AS1302**
  SL – Square ribbed fabric to AS4671
- **F - Hard drawn wire fabric to AS1304**
  RL – Rectangular ribbed fabric to AS4671
- **W - Hard drawn wire bar to AS1303**
- **RF - Ribbed fabric AS1302**

Provide 0.2mm High Impact Resistance branded polythene membrane to AS2870 to underside of floor slabs on ground, all laps to be 300mm and sealed with a 50mm wide strip of pressure-sensitive waterproof tape.
All filling must be of non-clay material compacted in 200mm layers to 98% maximum dry density.
Minimum reinforcement lap length shall be:

Bar Size	Lap Length (mm)
N12	500
N16	750
N20	1000
N24	1450
N28	1800
N32	2150
N36	2600

Laps to slab mesh to be one (1) full mesh panel plus 25mm.
Clear concrete cover to reinforcement, (including fitments and wire ties), shall be:

- Slab on fill - 30mm bottom and sides, 20mm top.
- Footings protected by vapour barrier - 40mm bottom and sides, 20mm top.
- Residential footings unprotected by vapour barrier - 40mm top, 50mm bottom and sides.

- Non-residential footings unprotected by damp-proof membrane - 50mm top, bottom and sides
- Suspended slabs, beams and columns - 20mm internal, 40mm external.

Concrete is to be kept free of load bearing brickwork by two (2) layers of a suitable membrane.
Brickwork must not be built on concrete slabs or beams until formwork and supporting have been removed.
Tension cracks may occur in slabs, apply suitable sealant for exposed surfaces.
Provide 10mm isolation joints where concrete is adjacent steelwork/masonry. Provide suitable filler and sealant.

MASONRY

Masonry construction is to comply with AS 3700.
Minimum characteristic unconfined compressive strength of units to be as follows:

Clay Bricks	40MPa
Concrete Bricks	10MPa
Concrete Hollow Blocks	15MPa
Mortar: Brickwork	1 : 0.25 : 3 (Cement : Lime : Sand)
Brickwork	1 : 0.5 : 4.5

Infill concrete grout to reinforced masonry to be grade 15, slump 230 +/ - 30, 10mm aggregate.
For Hollow block retaining walls, all cores are to be grouted.
Grouting to reinforced masonry shall be compacted by rodding with a plain round bar.
All air pockets and bubbles must be displaced during compaction. However, care must be taken to avoid damaging or dislodging the masonry or reinforcement while compacting the grout.

STEELWORK

All to comply with AS 4100, AS/NZ 1538 and AS 2327.
All welding to comply with AS 1554, parts 1, 2 & 3.
All fillet welds to be 6mm (category SP unless noted otherwise) extending the full length of the edges in contact, except where plate thicknesses are less then 6mm, use a weld size to match.
All bolts shall be H D Bolts, nuts and all other bolts and washers required for the erection of the steelwork, holes for H D Bolts to be 3mm oversize, holes for other bolts to be no more than 2mm oversize.
All bolting shall comply with AS4100 and be grade 8.8/S uno.
All base plates, H D bolts and columns in contact with ground to have concrete cover of 75mm minimum.
Minimum edge distance (taken from centre of fastener) shall be:

- Sheared or hand flame cut edge - 1.75D
- Rolled plate, machine flame cut sawn or planed edge - 1.50D
- Rolled edge of a rolled section - 1.25D
  (Where 'D' is the nominal diameter of the fastener).

Steelwork to be concrete encased must first be wrapped with SL41 mesh. The reinforcement is to be placed 25mm from the steelwork.
Provide a 10mm clearance between vertical faces of steelwork and adjacent masonry walls. Provide W6 ties between steelwork and masonry at 600 c/c (max).
All steelwork to be adequately propped and braced during construction until all permanent bracing, masonry and cladding has been erected.
All cold formed sections are to be constructed in accordance with the manufacturers specifications.
Steelwork Protective coatings to be:

- Exposed external steelwork less than 1km from the sea, or corrosive water or in areas west of the corrosion line marked on the wind speed map. : Hot-Dip Galvanized, and painted with an approved system.
- Exposed external steelwork (not exposed to corrosive environment) : Hot-Dip Galvanized, 'Dimet' treated or one coat sprayed Inorganic zinc silicate paint over class 2.5 abrasive blast surface.
- Steelwork acting as downpipe or gutter : Hot-Dip Galvanized.
- Internal steelwork (not exposed to moisture or corrosive environment) : Red oxide zinc chromate primer (Rozc) over wire brush surface.

Two (2) copies of shop detail drawings must be submitted to the engineer to review and approve prior to the commencement of fabrication. The review does not cover dimensions.

TIMBER
All to comply with AS 1720 and AS 1684.

EARTHWORKS
All to comply with AS3798 Guidelines.

SURFACE PROTECTIVE COATINGS

All structural members and surfaces, ie. beams, columns, walls, floors, ceilings, roofs both internally and externally shall be coated with an approved protective coating to suit their intended use/exposure environment, which is to be applied in strict accordance with the manufactures recommendations and specifications.

TERMITE PROTECTION

Termite protection system shall be in accordance with AS3660.1.

SITE INSPECTIONS

Must be carried out at the following stages:
After site preparation and trenching for the footing beams.
After the placement of reinforcement, prior to the pouring of any concrete.

Foundation Maintenance and Footing Performance: A Homeowner's Guide

CSIRO

BTF 18 replaces Information Sheet 10/91

Buildings can and often do move. This movement can be up, down, lateral or rotational. The fundamental cause of movement in buildings can usually be related to one or more problems in the foundation soil. It is important for the homeowner to identify the soil type in order to ascertain the measures that should be put in place in order to ensure that problems in the foundation soil can be prevented, thus protecting against building movement.

This Building Technology File is designed to identify causes of soil-related building movement, and to suggest methods of prevention of resultant cracking in buildings.

Soil Types

The types of soils usually present under the topsoil in land zoned for residential buildings can be split into two approximate groups – granular and clay. Quite often, foundation soil is a mixture of both types. The general problems associated with soils having granular content are usually caused by erosion. Clay soils are subject to saturation and swell/shrink problems.

Classifications for a given area can generally be obtained by application to the local authority, but these are sometimes unreliable and if there is doubt, a geotechnical report should be commissioned. As most buildings suffering movement problems are founded on clay soils, there is an emphasis on classification of soils according to the amount of swell and shrinkage they experience with variations of water content. The table below is Table 2.1 from AS 2870, the Residential Slab and Footing Code.

Causes of Movement

Settlement due to construction

There are two types of settlement that occur as a result of construction:

- Immediate settlement occurs when a building is first placed on its foundation soil, as a result of compaction of the soil under the weight of the structure. The cohesive quality of clay soil mitigates against this, but granular (particularly sandy) soil is susceptible.
- Consolidation settlement is a feature of clay soil and may take place because of the expulsion of moisture from the soil or because of the soil's lack of resistance to local compressive or shear stresses. This will usually take place during the first few months after construction, but has been known to take many years in exceptional cases.

These problems are the province of the builder and should be taken into consideration as part of the preparation of the site for construction. Building Technology File 19 (BTF 19) deals with these problems.

Erosion

All soils are prone to erosion, but sandy soil is particularly susceptible to being washed away. Even clay with a sand component of say 10% or more can suffer from erosion.

Saturation

This is particularly a problem in clay soils. Saturation creates a bog-like suspension of the soil that causes it to lose virtually all of its bearing capacity. To a lesser degree, sand is affected by saturation because saturated sand may undergo a reduction in volume – particularly imported sand fill for bedding and blinding layers. However, this usually occurs as immediate settlement and should normally be the province of the builder.

Seasonal swelling and shrinkage of soil

All clays react to the presence of water by slowly absorbing it, making the soil increase in volume (see table below). The degree of increase varies considerably between different clays, as does the degree of decrease during the subsequent drying out caused by fair weather periods. Because of the low absorption and expulsion rate, this phenomenon will not usually be noticeable unless there are prolonged rainy or dry periods, usually of weeks or months, depending on the land and soil characteristics.

The swelling of soil creates an upward force on the footings of the building, and shrinkage creates subsidence that takes away the support needed by the footing to retain equilibrium.

Shear failure

This phenomenon occurs when the foundation soil does not have sufficient strength to support the weight of the footing. There are two major post-construction causes:

- Significant load increase.
- Reduction of lateral support of the soil under the footing due to erosion or excavation.
- In clay soil, shear failure can be caused by saturation of the soil adjacent to or under the footing.

GENERAL DEFINITIONS OF SITE CLASSES

Class	Foundation
A	Most sand and rock sites with little or no ground movement from moisture changes
S	Slightly reactive clay sites with only slight ground movement from moisture changes
M	Moderately reactive clay or silt sites, which can experience moderate ground movement from moisture changes
H	Highly reactive clay sites, which can experience high ground movement from moisture changes
E	Extremely reactive sites, which can experience extreme ground movement from moisture changes
A to P	Filled sites
P	Sites which include soft soils, such as soft clay or silt or loose sands; landslip; mine subsidence; collapsing soils; soils subject to erosion; reactive sites subject to abnormal moisture conditions or sites which cannot be classified otherwise

Tree root growth
Trees and shrubs that are allowed to grow in the vicinity of footings can cause foundation soil movement in two ways:

- Roots that grow under footings may increase in cross-sectional size, exerting upward pressure on footings.
- Roots in the vicinity of footings will absorb much of the moisture in the foundation soil, causing shrinkage or subsidence.

Unevenness of Movement

The types of ground movement described above usually occur unevenly throughout the building's foundation soil. Settlement due to construction tends to be uneven because of:

- Differing compaction of foundation soil prior to construction.
- Differing moisture content of foundation soil prior to construction.

Movement due to non-construction causes is usually more uneven still. Erosion can undermine a footing that traverses the flow or can create the conditions for shear failure by eroding soil adjacent to a footing that runs in the same direction as the flow.

Saturation of clay foundation soil may occur where subfloor walls create a dam that makes water pond. It can also occur wherever there is a source of water near footings in clay soil. This leads to a severe reduction in the strength of the soil which may create local shear failure.

Seasonal swelling and shrinkage of clay soil affects the perimeter of the building first, then gradually spreads to the interior. The swelling process will usually begin at the uphill extreme of the building, or on the weather side where the land is flat. Swelling gradually reaches the interior soil as absorption continues. Shrinkage usually begins where the sun's heat is greatest.

Effects of Uneven Soil Movement on Structures

Erosion and saturation
Erosion removes the support from under footings, tending to create subsidence of the part of the structure under which it occurs. Brickwork walls will resist the stress created by this removal of support by bridging the gap or cantilevering until the bricks or the mortar bedding fail. Older masonry has little resistance. Evidence of failure varies according to circumstances and symptoms may include:

- Step cracking in the mortar beds in the body of the wall or above/below openings such as doors or windows.
- Vertical cracking in the bricks (usually but not necessarily in line with the vertical beds or perpends).

Isolated piers affected by erosion or saturation of foundations will eventually lose contact with the bearers they support and may tilt or fall over. The floors that have lost this support will become bouncy, sometimes rattling ornaments etc.

Seasonal swelling/shrinkage in clay
Swelling foundation soil due to rainy periods first lifts the most exposed extremities of the footing system, then the remainder of the perimeter footings while gradually permeating inside the building footprint to lift internal footings. This swelling first tends to create a dish effect, because the external footings are pushed higher than the internal ones.

The first noticeable symptom may be that the floor appears slightly dished. This is often accompanied by some doors binding on the floor or the door head, together with some cracking of cornice mitres. In buildings with timber flooring supported by bearers and joists, the floor can be bouncy. Externally there may be visible dishing of the hip or ridge lines.

As the moisture absorption process completes its journey to the innermost areas of the building, the internal footings will rise. If the spread of moisture is roughly even, it may be that the symptoms will temporarily disappear, but it is more likely that swelling will be uneven, creating a difference rather than a disappearance in symptoms. In buildings with timber flooring supported by bearers and joists, the isolated piers will rise more easily than the strip footings or piers under walls, creating noticeable doming of flooring.

Trees can cause shrinkage and damage

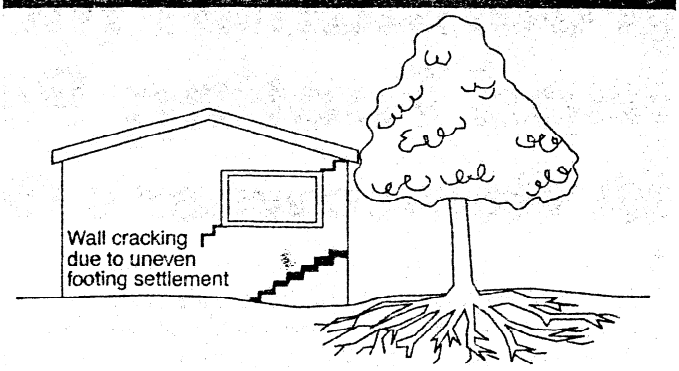

As the weather pattern changes and the soil begins to dry out, the external footings will be first affected, beginning with the locations where the sun's effect is strongest. This has the effect of lowering the external footings. The doming is accentuated and cracking reduces or disappears where it occurred because of dishing, but other cracks open up. The roof lines may become convex.

Doming and dishing are also affected by weather in other ways. In areas where warm, wet summers and cooler dry winters prevail, water migration tends to be toward the interior and doming will be accentuated, whereas where summers are dry and winters are cold and wet, migration tends to be toward the exterior and the underlying propensity is toward dishing.

Movement caused by tree roots
In general, growing roots will exert an upward pressure on footings, whereas soil subject to drying because of tree or shrub roots will tend to remove support from under footings by inducing shrinkage.

Complications caused by the structure itself
Most forces that the soil causes to be exerted on structures are vertical – i.e. either up or down. However, because these forces are seldom spread evenly around the footings, and because the building resists uneven movement because of its rigidity, forces are exerted from one part of the building to another. The net result of all these forces is usually rotational. This resultant force often complicates the diagnosis because the visible symptoms do not simply reflect the original cause. A common symptom is binding of doors on the vertical member of the frame.

Effects on full masonry structures
Brickwork will resist cracking where it can. It will attempt to span areas that lose support because of subsided foundations or raised points. It is therefore usual to see cracking at weak points, such as openings for windows or doors.

In the event of construction settlement, cracking will usually remain unchanged after the process of settlement has ceased.

With local shear or erosion, cracking will usually continue to develop until the original cause has been remedied, or until the subsidence has completely neutralised the affected portion of footing and the structure has stabilised on other footings that remain effective.

In the case of swell/shrink effects, the brickwork will in some cases return to its original position after completion of a cycle, however it is more likely that the rotational effect will not be exactly reversed, and it is also usual that brickwork will settle in its new position and will resist the forces trying to return it to its original position. This means that in a case where swelling takes place after construction and cracking occurs, the cracking is likely to at least partly remain after the shrink segment of the cycle is complete. Thus, each time the cycle is repeated, the likelihood is that the cracking will become wider until the sections of brickwork become virtually independent.

With repeated cycles, once the cracking is established, if there is no other complication, it is normal for the incidence of cracking to stabilise, as the building has the articulation it needs to cope with the problem. This is by no means always the case, however, and monitoring of cracks in walls and floors should always be treated seriously.

Upheaval caused by growth of tree roots under footings is not a simple vertical shear stress. There is a tendency for the root to also exert lateral forces that attempt to separate sections of brickwork after initial cracking has occurred.

The normal structural arrangement is that the inner leaf of brickwork in the external walls and at least some of the internal walls (depending on the roof type) comprise the load-bearing structure on which any upper floors, ceilings and the roof are supported. In these cases, it is internally visible cracking that should be the main focus of attention, however there are a few examples of dwellings whose external leaf of masonry plays some supporting role, so this should be checked if there is any doubt. In any case, externally visible cracking is important as a guide to stresses on the structure generally, and it should also be remembered that the external walls must be capable of supporting themselves.

Effects on framed structures
Timber or steel framed buildings are less likely to exhibit cracking due to swell/shrink than masonry buildings because of their flexibility. Also, the doming/dishing effects tend to be lower because of the lighter weight of walls. The main risks to framed buildings are encountered because of the isolated pier footings used under walls. Where erosion or saturation cause a footing to fall away, this can double the span which a wall must bridge. This additional stress can create cracking in wall linings, particularly where there is a weak point in the structure caused by a door or window opening. It is, however, unlikely that framed structures will be so stressed as to suffer serious damage without first exhibiting some or all of the above symptoms for a considerable period. The same warning period should apply in the case of upheaval. It should be noted, however, that where framed buildings are supported by strip footings there is only one leaf of brickwork and therefore the externally visible walls are the supporting structure for the building. In this case, the subfloor masonry walls can be expected to behave as full brickwork walls.

Effects on brick veneer structures
Because the load-bearing structure of a brick veneer building is the frame that makes up the interior leaf of the external walls plus perhaps the internal walls, depending on the type of roof, the building can be expected to behave as a framed structure, except that the external masonry will behave in a similar way to the external leaf of a full masonry structure.

Water Service and Drainage

Where a water service pipe, a sewer or stormwater drainage pipe is in the vicinity of a building, a water leak can cause erosion, swelling or saturation of susceptible soil. Even a minuscule leak can be enough to saturate a clay foundation. A leaking tap near a building can have the same effect. In addition, trenches containing pipes can become watercourses even though backfilled, particularly where broken rubble is used as fill. Water that runs along these trenches can be responsible for serious erosion, interstrata seepage into subfloor areas and saturation.

Pipe leakage and trench water flows also encourage tree and shrub roots to the source of water, complicating and exacerbating the problem.
Poor roof plumbing can result in large volumes of rainwater being concentrated in a small area of soil:

- Incorrect falls in roof guttering may result in overflows, as may gutters blocked with leaves etc.
- Corroded guttering or downpipes can spill water to ground.
- Downpipes not positively connected to a proper stormwater collection system will direct a concentration of water to soil that is directly adjacent to footings, sometimes causing large-scale problems such as erosion, saturation and migration of water under the building.

Seriousness of Cracking

In general, most cracking found in masonry walls is a cosmetic nuisance only and can be kept in repair or even ignored. The table below is a reproduction of Table C1 of AS 2870.

AS 2870 also publishes figures relating to cracking in concrete floors, however because wall cracking will usually reach the critical point significantly earlier than cracking in slabs, this table is not reproduced here.

Prevention/Cure

Plumbing
Where building movement is caused by water service, roof plumbing, sewer or stormwater failure, the remedy is to repair the problem. It is prudent, however, to consider also rerouting pipes away from the building where possible, and relocating taps to positions where any leakage will not direct water to the building vicinity. Even where gully traps are present, there is sometimes sufficient spill to create erosion or saturation, particularly in modern installations using smaller diameter PVC fixtures. Indeed, some gully traps are not situated directly under the taps that are installed to charge them, with the result that water from the tap may enter the backfilled trench that houses the sewer piping. If the trench has been poorly backfilled, the water will either pond or flow along the bottom of the trench. As these trenches usually run alongside the footings and can be at a similar depth, it is not hard to see how any water that is thus directed into a trench can easily affect the foundation's ability to support footings or even gain entry to the subfloor area.

Ground drainage
In all soils there is the capacity for water to travel on the surface and below it. Surface water flows can be established by inspection during and after heavy or prolonged rain. If necessary, a grated drain system connected to the stormwater collection system is usually an easy solution.

It is, however, sometimes necessary when attempting to prevent water migration that testing be carried out to establish watertable height and subsoil water flows. This subject is referred to in BTF 19 and may properly be regarded as an area for an expert consultant.

Protection of the building perimeter
It is essential to remember that the soil that affects footings extends well beyond the actual building line. Watering of garden plants, shrubs and trees causes some of the most serious water problems.

For this reason, particularly where problems exist or are likely to occur, it is recommended that an apron of paving be installed around as much of the building perimeter as necessary. This paving

CLASSIFICATION OF DAMAGE WITH REFERENCE TO WALLS

Description of typical damage and required repair	Approximate crack width limit (see Note 3)	Damage category
Hairline cracks	<0.1 mm	0
Fine cracks which do not need repair	<1 mm	1
Cracks noticeable but easily filled. Doors and windows stick slightly	<5 mm	2
Cracks can be repaired and possibly a small amount of wall will need to be replaced. Doors and windows stick. Service pipes can fracture. Weathertightness often impaired	5–15 mm (or a number of cracks 3 mm or more in one group)	3
Extensive repair work involving breaking-out and replacing sections of walls, especially over doors and windows. Window and door frames distort. Walls lean or bulge noticeably, some loss of bearing in beams. Service pipes disrupted	15–25 mm but also depend on number of cracks	4

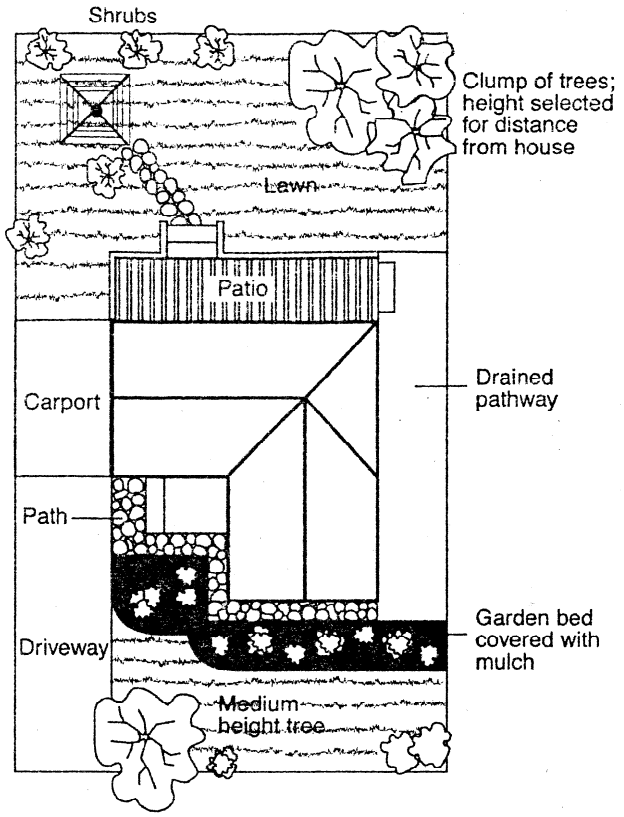

should extend outwards a minimum of 900 mm (more in highly reactive soil) and should have a minimum fall away from the building of 1:60. The finished paving should be no less than 100 mm below brick vent bases.

It is prudent to relocate drainage pipes away from this paving, if possible, to avoid complications from future leakage. If this is not practical, earthenware pipes should be replaced by PVC and backfilling should be of the same soil type as the surrounding soil and compacted to the same density.

Except in areas where freezing of water is an issue, it is wise to remove taps in the building area and relocate them well away from the building – preferably not uphill from it (see BTF 19).

It may be desirable to install a grated drain at the outside edge of the paving on the uphill side of the building. If subsoil drainage is needed this can be installed under the surface drain.

Condensation

In buildings with a subfloor void such as where bearers and joists support flooring, insufficient ventilation creates ideal conditions for condensation, particularly where there is little clearance between the floor and the ground. Condensation adds to the moisture already present in the subfloor and significantly slows the process of drying out. Installation of an adequate subfloor ventilation system, either natural or mechanical, is desirable.

Warning: Although this Building Technology File deals with cracking in buildings, it should be said that subfloor moisture can result in the development of other problems, notably:

- Water that is transmitted into masonry, metal or timber building elements causes damage and/or decay to those elements.
- High subfloor humidity and moisture content create an ideal environment for various pests, including termites and spiders.
- Where high moisture levels are transmitted to the flooring and walls, an increase in the dust mite count can ensue within the living areas. Dust mites, as well as dampness in general, can be a health hazard to inhabitants, particularly those who are abnormally susceptible to respiratory ailments.

The garden

The ideal vegetation layout is to have lawn or plants that require only light watering immediately adjacent to the drainage or paving edge, then more demanding plants, shrubs and trees spread out in that order.

Overwatering due to misuse of automatic watering systems is a common cause of saturation and water migration under footings. If it is necessary to use these systems, it is important to remove garden beds to a completely safe distance from buildings.

Existing trees

Where a tree is causing a problem of soil drying or there is the existence or threat of upheaval of footings, if the offending roots are subsidiary and their removal will not significantly damage the tree, they should be severed and a concrete or metal barrier placed vertically in the soil to prevent future root growth in the direction of the building. If it is not possible to remove the relevant roots without damage to the tree, an application to remove the tree should be made to the local authority. A prudent plan is to transplant likely offenders before they become a problem.

Information on trees, plants and shrubs

State departments overseeing agriculture can give information regarding root patterns, volume of water needed and safe distance from buildings of most species. Botanic gardens are also sources of information. For information on plant roots and drains, see Building Technology File 17.

Excavation

Excavation around footings must be properly engineered. Soil supporting footings can only be safely excavated at an angle that allows the soil under the footing to remain stable. This angle is called the angle of repose (or friction) and varies significantly between soil types and conditions. Removal of soil within the angle of repose will cause subsidence.

Remediation

Where erosion has occurred that has washed away soil adjacent to footings, soil of the same classification should be introduced and compacted to the same density. Where footings have been undermined, augmentation or other specialist work may be required. Remediation of footings and foundations is generally the realm of a specialist consultant.

Where isolated footings rise and fall because of swell/shrink effect, the homeowner may be tempted to alleviate floor bounce by filling the gap that has appeared between the bearer and the pier with blocking. The danger here is that when the next swell segment of the cycle occurs, the extra blocking will push the floor up into an accentuated dome and may also cause local shear failure in the soil. If it is necessary to use blocking, it should be by a pair of fine wedges and monitoring should be carried out fortnightly.

This BTF was prepared by John Lewer FAIB, MIAMA, Partner, Construction Diagnosis.

The information in this and other issues in the series was derived from various sources and was believed to be correct when published.

The information is advisory. It is provided in good faith and not claimed to be an exhaustive treatment of the relevant subject.

Further professional advice needs to be obtained before taking any action based on the information provided.

Distributed by

CSIRO PUBLISHING PO Box 1139, Collingwood 3066, Australia

Freecall 1800 645 051 Tel (03) 9662 7666 Fax (03) 9662 7555 www.publish.csiro.au

Email: publishing.sales@csiro.au

© CSIRO 2003. Unauthorised copying of this Building Technology file is prohibited